AMENDMENT OF SOLICITAT. N/MODIFICATION OF CONTRAC.

1. Contract ID Code	Page	of Pages
	1	5

2. Amendment/Modification No.	3. Effective Date	4. Requisition/Purchase Req. No.	5. Project No. (if applicable)
0090	Apr 14, 2003	NWWG9500-3-33305	

6. Issued By — Code WG953023
NATIONAL DATA BUOY CENTER
RESOURCES BRANCH
BLDG 1100, W/OPS53
STENNIS SPACE CENTER MS 39529-6000
Penny S. Parker 228-688-1705

7. Administered By (If other than Item 6) — Code
SEE BLOCK 6

8. Name and Address of Contractor (*No., Street, County, and Zip Code*)

SCIENCE APPLICATIONS INTERNTL
BUILDING 3205
STENNIS SPACE CENTER MS 39529-6000
ATTN: MS. PAMALA HATTAWAY
(228) 688-1830

Vendor ID: 00027009
DUNS: 054781240
CAGE:

(X)	
	9A. Amendment of Solicitation No.
	9B. Date (*See Item 11*)
X	10A. Modification of Contract/Order No. 50QANW000402
	10B. Date (*See Item 13*) May 18, 2000

Code | Facility Code

11. THIS ITEM ONLY APPLIES TO AMENDMENTS OF SOLICITATIONS

☐ The above numbered solicitation is amended as set forth in item 14. The hour and date specified for receipt of Offers ☐ is extended ☐ is not extended. Offers must acknowledge receipt of this amendment prior to the hour and date specified in the solicitation or as amended, by one of the following methods: (a) By completing items 8 and 15, and returning ____ copies of the amendment; (b) By acknowledging receipt of this amendment on each copy of the offer submitted; or (c) By separate letter or telegram which includes a reference to the solicitation and amendment numbers. FAILURE OF YOUR ACKNOWLEDGMENT TO BE RECEIVED AT THE PLACE DESIGNATED FOR THE RECEIPT OF OFFERS PRIOR TO THE HOUR AND DATE SPECIFIED MAY RESULT IN REJECTION OF YOUR OFFER. If by virtue of this amendment you desire to change an offer already submitted, such change may be made by telegram or letter, provided each telegram or letter makes reference to the solicitation and this amendment, and is received prior to the opening hour and date specified.

12. Accounting and Appropriation Data (*if required*)
See Schedule $ US 365,871.00

13. THIS ITEM APPLIES ONLY TO MODIFICATIONS OF CONTRACT/ORDERS. IT MODIFIES THE CONTRACT/ORDER NO. AS DESCRIBED IN ITEM 14.

(x)	A. This change order is issued pursuant to: (*Specify authority*) The changes set forth in item 14 are made in the Contract Order No. in item 10A.
	B. The above numbered Contract/Order is modified to reflect the administrative changes (*such as changes in paying office, appropriation date, etc.*) Set fourth item 14, pursuant to the authority of FAR 43.103 (b)
X	C. This supplemental agreement is entered into pursuant to authority of: Under scope, with in terms and conditions of contract; by mutual agreement.
x	D. Other (*Specify type of modification and authority*) FAR 52.232-22 - "LIMITATION OF FUNDS."

E. IMPORTANT: Contractor ☐ is not, ☒ is required to sign this document and return 3 copies to the issuing office.

14. Description of Amendment/Modification (*Organized by UCF section headings, including solicitation/contract subject matter where feasible.*)

1. Accounting and Appropriations Schedule of the subject contract is hereby revised by addition of page 5N, attached.

	Contract Value	Total Sum Allotted
Previous Value	$27,810,017.19	$24,300,592.13
This Action	- 0 -	365,871.00
Current Value	$27,810,017.19	$24,666,463.13

(Continued)

Except as provided herein, all terms and conditions of the document referenced in item 9A or 10A, as heretofore changed, remains unchanged and in full force and effect.

15A. Name and Title of Signer (*Type or Print*)	16A. Name and title of Contracting Officer (*Type or Print*)
Pamala J. Hattaway Contracts Representative	Penny S. Parker 228-688-1705 Contracting Officer Penny.Parker@noaa.gov

15B. Contractor/Offeror	15C. Date Signed	16B. United States of America	16C. Date Signed
Pamala J. Hattaway (Signature of person authorized to sign)	4/16/03	(Signature of Contracting Officer)	4/16/03

SCHEDULE

.o.	Supplies/Services	Quantity	Unit	Unit Price	Amount
	The modification details are listed beginning on page 3.				
0003	Second Option Year Estimated Cost	1	YR	10,413,465.19	10,413,465.19
	Accounting and Appropriation Data:				
	14.03.4RM1JD9PR407040102000.2006000095030 000.26190000 US 2,000.00 14.03.4RM1JD9PR407040102000.2006000095030 000.25130000 US 13,871.00				
	14.03.A8M1JMWPA223040102000.20060000950 30000.25130000 US 350,000.00				

2. This modification incorporates the following:
(a) reduction of the potential award fee by ($267) to correct a computational error;
(b) deletion of the following accounting and appropriation account lines:

1403A8M1JMWPGC010401020002006000095030000026190000	$30,000.00
1403A8M1JMWPA201040102000200600009503000025130000	$264,000.00
1403A8M1JMWPGC010401020002006000095030000026190000	$30,000.00
1403A8M1JMWPA201040102000200600009503000025130000	$350,000.00
1403A8M1JMWPGC010401020002006000095030000026190000	$38,000.00
1403A8M1JMWPA201040102000200600009503000025130000	$250,000.00

addition of the following accounting and appropriation accounts lines:

1403A8M1JMWPGC230401020002006000095030000026190000	$30,000.00
1403A8M1JMWPA223040102000200600009503000025130000	$264,000.00
1403A8M1JMWPGC230401020002006000095030000026190000	$30,000.00
1403A8M1JMWPA223040102000200600009503000025130000	$350,000.00
1403A8M1JMWPGC230401020002006000095030000026190000	$38,000.00
1403A8M1JMWPA223040102000200600009503000025130000	$250,000.00

(d) renumbering of the following Accounting/Appropriations pages (renumbered pages are attached):

(1) page 5K is changed to 5L for Mod. Nos. 0085 through 0088;
(2) page 5K is changed to 5M for Mod. No. 0089; and

(e) addition of $365,871.00 in incremental contract funding.

3. SECTION B.3 ESTIMATED AND ALLOWABLE COSTS—INCREMENTALLY FUNDED CONTRACT, Paragraphs (1) and (3) are hereby revised as follows:
(a) Estimated Costs, Fee, and Sum Allotted

(1) Estimated cost, base fee, and potential award fee by contract period.

Period	Estimated Cost	Potential Award Fee
07/01/00-06/30/01	$7,863,162	$342,588
07/01/01-06/30/02	$9,533,390	$411,497
07/01/02-06/30/03	$10,413,465	$444,387
07/01/03-06/30/04	$9,465,469	$427,888
07/01/04-06/30/05	$9,585,085	$430,772

(2) Total contract value is computed as follows:

[redacted]

Fixed Price Work	350,675.19
Total Contract Value	$27,810,017.19

(3) Total funds currently available for payment and allotted to this contract, in accordance with FAR clause 52.232-22, "Limitation of Funds," plus the estimated contract period covered by this amount:

Total Sum Allotted	$24,666,463.13
[redacted]	
Potential Award Fee	$ 1,198,472.00
Estimated Period of Performance	07/01/2000 - 05/07/2003

(Continued)

MOD	SUP	ACC/APP	AMOUNT	CUMULATIVE OBLIGATION	DATE
0090	S-90	1403A8M1JMWPGC010401020002006000095030000 26190000	(30,000.00)		
		1403A8M1JMWPA201040102000200600009503000 25130000	(264,000.00)		
		1403A8M1JMWPGC010401020002006000095030000 26190000	(30,000.00)		
		1403A8M1JMWPA201040102000200600009503000 25130000	(350,000.00)		
		1403A8M1JMWPGC010401020002006000095030000 26190000	(38,000.00)		
		1403A8M1JMWPA201040102000200600009503000 25130000	(250,000.00)		
		1403A8M1JMWPGC230401020002006000095030000 26190000	30,000.00		
		1403A8M1JMWPA223040102000200600009503000 25130000	264,000.00		
		1403A8M1JMWPGC230401020002006000095030000 26190000	30,000.00		
		1403A8M1JMWPA223040102000200600009503000 25130000	350,000.00		
		1403A8M1JMWPGC230401020002006000095030000 26190000	38,000.00		
		1403A8M1JMWPA223040102000200600009503000 25130000	250,000.00		
		14034RM1JD9PR407040102000200600009503000 26190000	2,000.00		
		14034RM1JD9PR407040102000200600009503000 25130000	13,871.00		
		1403A8M1JMWPA223040102000200600009503000 25130000	350,000.00		
			$ 365,871.00	$24,666,463.13	04/10/03

MOD	SUP	ACC/APP	AMOUNT	CULULATIVE OBLIGATION	DATE
0089	S-89	140348M1JMWPGC010401020002006000095030000 3WG9503 2619	($ 30,000.00)		
		140348M1JMWPA201040102000200600095030000 3WG9503 2513	(264,000.00)		
		140348M1JMWPGC010401020002006000095030000 3WG9503 2619	(30,000.00)		
		140348M1JMWPA201040102000200600095030000 3WG9503 2513	(350,000.00)		
		140348M1JMWPGC010401020002006000095030000 3WG9503 2619	(38,000.00)		
		1403A8M1JMWPGC010401020002006000095030000 26190000	30,000.00		
		1403A8M1JMWPA201040102000200600095030000 25130000	264,000.00		
		1403A8M1JMWPGC010401020002006000095030000 26190000	30,000.00		
		1403A8M1JMWPA201040102000200600095030000 25130000	350,000.00		
		1403A8M1JMWPGC010401020002006000095030000 26190000	38,000.00		
		1403A8M1JMWPA201040102000200600095030000 25130000	250,000.00		
		140352NS1GGP601605030100120006000095030000 25130000	61,627.00		
		14034BM1JSMPR606040102000200600095030000 25130000	14,427.90		
		14034BM1JSMPR606040102000200600095030000 26190000	750.00		
			$ 326,804.90	$24,300,592.13	03/28/03

MOD	SUP	ACC/APP	AMOUNT	CULULATIVE OBLIGATION	DATE
0085	S-86	14034BM1J60PRG0604010200020060000950300003WG9503 2513	$ 86,000.00		
		14034RM1J47PRB0704010200020060000950300003WG9503 2513	120,000.00		
		140348M1JMWPA2010401020002006000095030000 3WG9503 2513	264,000.00		
		140348M1JMWPGC0104010200020060000950300003WG9503 2619	30,000.00		
			$500,000.00	$23,368,787.23	01/17/03
0086	- -	N/A	N/A	$23,368,787.23	02/06/03
0087	S-87	140348M1JMWPA2010401020002006000095030000 3WG9503 2513	$350,000.00		
		140348M1JMWPGC0104010200020060000950300003WG9503 2619	$ 38,000.00		
			$388,000.00	$23,756,787.23	03/03/03
0088	S-88	1403A8M1JMWPA2010401020002006000095030000 25130000	$350,000.00		
		1403A8M1JMWPGC0104010200020060000950300001 26190000	65,000.00		
		14034BM1J60PRG0604010200020060000950300001 26190000	2,000.00		
		14024BM1J89PRA0604010200020060000950100001 25130000 - FY2002	(200,000.00)		
			$217,000.00	$23,973,787.23	03/25/03

.NDMENT OF SOLICITATION/MODIFICATION OF CONTRACT

1. Contract ID Code	Page	of Pages
	1	4

.mendment/Modification No.	3. Effective Date	4. Requisition/Purchase Req. No.	5. Project No. (if applicable)
0091	Apr 21, 2003	NWWG9500-3-33458	

6. 'ssued By	Code	7. Administered By (If other than Item 6)	Code
..TIONAL DATA BUOY CENTER RESOURCES BRANCH BLDG 1100, W/OPS53 STENNIS SPACE CENTER MS 39529-6000 Penny S. Parker 228-688-1705	WG953023	SEE BLOCK 6	

8. Name and Address of Contractor (*No., Street, County, and Zip Code*)

SCIENCE APPLICATIONS INTERNTL
BUILDING 3205
STENNIS SPACE CENTER MS 39529-6000
ATTN: MS. PAMALA HATTAWAY
(228) 688-1830

Vendor ID: 00027009
DUNS: 054781240

CAGE:

(X)	
	9A. Amendment of Solicitation No.
	9B. Date (*See Item 11*)
X	10A. Modification of Contract/Order No. 50QANW000402
	10B. Date (*See Item 13*) May 18, 2000

Code	Facility Code

11. THIS ITEM ONLY APPLIES TO AMENDMENTS OF SOLICITATIONS

☐ The above numbered solicitation is amended as set forth in item 14. The hour and date specified for receipt of Offers ☐ is extended ☐ is not extended. Offers must acknowledge receipt of this amendment prior to the hour and date specified in the solicitation or as amended, by one of the following methods: (a) By completing items 8 and 15, and returning ____ copies of the amendment; (b) By acknowledging receipt of this amendment on each copy of the offer submitted; or (c) By separate letter or telegram which includes a reference to the solicitation and amendment numbers. FAILURE OF YOUR ACKNOWLEDGMENT TO BE RECEIVED AT THE PLACE DESIGNATED FOR THE RECEIPT OF OFFERS PRIOR TO THE HOUR AND DATE SPECIFIED MAY RESULT IN REJECTION OF YOUR OFFER. If by virtue of this amendment you desire to change an offer already submitted, such change may be made by telegram or letter, provided each telegram or letter makes reference to the solicitation and this amendment, and is received prior to the opening hour and date specified.

12. Accounting and Appropriation Data (*if required*)
$ US 1,000,000.00

13. THIS ITEM APPLIES ONLY TO MODIFICATIONS OF CONTRACT/ORDERS. IT MODIFIES THE CONTRACT/ORDER NO. AS DESCRIBED IN ITEM 14.

(x)	A. This change order is issued pursuant to: (*Specify authority*) The changes set forth in item 14 are made in the Contract Order No. in item 10A.
	B. The above numbered Contract/Order is modified to reflect the administrative changes (*such as changes in paying office, appropriation date, etc.*) Set fourth item 14, pursuant to the authority of FAR 43.103 (b)
	C. This supplemental agreement is entered into pursuant to authority of:
X	D. Other (*Specify type of modification and authority*) FAR 52.232-22 - "Limitation of Funds."

E. IMPORTANT: Contractor [X] is not, [ ] is required to sign this document and return ____ copies to the issuing office.

14. Description of Amendment/Modification (*Organized by UCF section headings, including solicitation/contract subject matter where feasible.*)

1. Accounting and Appropriations Schedule of the subject contract is hereby revised by addition of page 4N, attached:

	Contract Value	Total Sum Allotted
Previous Value	$27,810,017.19	$24,666,463.13
This Action	- 0 -	1,000,000.00
Current Value	$27,810,017.19	$25,666,463.13

(Continued)

Except as provided herein, all terms and conditions of the document referenced in item 9A or 10A, as heretofore changed, remains unchanged and in full force and effect.

15A. Name and Title of Signer (*Type or Print*)		16A. Name and title of Contracting Officer (*Type or Print*)	
		Penny S. Parker Contracting Officer Penny.Parker@noaa.gov	228-688-1705
15B. Contractor/Offeror (Signature of person authorized to sign)	15C. Date Signed	16B. United States of America Original Signed by (Signature of Contracting Officer)	16C. Date Signed APR 21 2003

SCHEDULE

	Supplies/Services	Quantity	Unit	Unit Price	Amount
	The modification details are listed beginning on page 3.				
J03	Second Option Year Estimated Cost	1	YR	10,413,465.19	10,413,465.19

2. This modification incorporates $1,000,000.00 in incremental contract funding.

3. SECTION B.3 ESTIMATED AND ALLOWABLE COSTS—INCREMENTALLY FUNDED CONTRACT, Paragraph (3) is hereby revised as follows:

(a) Estimated Costs, Fee, and Sum Allotted

(1) Estimated cost, base fee, and potential award fee by contract period.

Period	Estimated Cost	Potential Award Fee
07/01/00-06/30/01	$7,863,162	$342,588
07/01/01-06/30/02	$9,533,390	$411,497
07/01/02-06/30/03	$10,413,465	$444,387
07/01/03-06/30/04	$9,465,469	$427,888
07/01/04-06/30/05	$9,585,085	$430,772

(2) Total contract value is computed as follows:

[redacted]

Fixed Price Work	350,675.19
Total Contract Value	$27,810,017.19

(3) Total funds currently available for payment and allotted to this contract, in accordance with FAR clause 52.232-22, "Limitation of Funds," plus the estimated contract period covered by this amount:

Total Sum Allotted	$25,666,463.13
[redacted]	
Potential Award Fee	$ 1,198,472.00
Estimated Period of Performance	07/01/2000 - 05/09/2003

MOD	SUP	ACC/APP	AMOUNT	CUMULATIVE OBLIGATION	DATE
0091	S-91	1403A8M1JMWPA2230401020002006000095030000 25130000	$1,000,000.00 $1,000,000.00	$25,666,463.13	04/21/03

AMENDMENT OF SOLICITAT. N/MODIFICATION OF CONTRAC

1 | 5

2. Amendment/Modification No.	3. Effective Date	4. Requisition/Purchase Req. No.	5. Project No. (If applicable)
0092	Apr 28, 2003	NWWG9502-3-33563	

6. Issued By — Code WG953023
NATIONAL DATA BUOY CENTER
RESOURCES BRANCH
BLDG 1100, W/OPS53
STENNIS SPACE CENTER MS 39529-6000
Penny S. Parker 228-688-1705

7. Administered By (If other than Item 6) — Code
SEE BLOCK 6

8. Name and Address of Contractor (*No., Street, County, and Zip Code*)

SCIENCE APPLICATIONS INTERNTL
BUILDING 3205
STENNIS SPACE CENTER MS 39529-6000
ATTN: MS. PAMALA HATTAWAY
(228) 688-1830

Vendor ID: 00027009
DUNS: 054781240
CAGE:

(X)	
	9A. Amendment of Solicitation No.
	9B. Date (*See Item 11*)
X	10A. Modification of Contract/Order No. 50QANW000402
	10B. Date (*See Item 13*) May 18, 2000

Code | Facility Code

11. THIS ITEM ONLY APPLIES TO AMENDMENTS OF SOLICITATIONS

[ ] The above numbered solicitation is amended as set forth in Item 14. The hour and date specified for receipt of Offers [ ] is extended [ ] is not extended. Offers must acknowledge receipt of this amendment prior to the hour and date specified in the solicitation or as amended, by one of the following methods: (a) By completing Items 8 and 15, and returning ____ copies of the amendment; (b) By acknowledging receipt of this amendment on each copy of the offer submitted; or (c) By separate letter or telegram which includes a reference to the solicitation and amendment numbers. FAILURE OF YOUR ACKNOWLEDGMENT TO BE RECEIVED AT THE PLACE DESIGNATED FOR THE RECEIPT OF OFFERS PRIOR TO THE HOUR AND DATE SPECIFIED MAY RESULT IN REJECTION OF YOUR OFFER. If by virtue of this amendment you desire to change an offer already submitted, such change may be made by telegram or letter, provided each telegram or letter makes reference to the solicitation and this amendment, and is received prior to the opening hour and date specified.

12. Accounting and Appropriation Data (*if required*)
$ US 143,659.06

13. THIS ITEM APPLIES ONLY TO MODIFICATIONS OF CONTRACT/ORDERS.
IT MODIFIES THE CONTRACT/ORDER NO. AS DESCRIBED IN ITEM 14.

(x)	A. This change order is issued pursuant to: (*Specify authority*) The changes set forth in item 14 are made in the Contract Order No. in item 10A.
	B. The above numbered Contract/Order is modified to reflect the administrative changes (*such as changes in paying office, appropriation date, etc.*) Set fourth item 14, pursuant to the authority of FAR 43.103 (b)
X	C. This supplemental agreement is entered into pursuant to authority of: Under scope, within terms and conditions of contract; by mutual agreement.
X	D. Other (*Specify type of modification and authority*) FAR - 52.232-22 - "Limitation of Funds."

E. IMPORTANT: Contractor [ ] is not, [X] is required to sign this document and return 3 copies to the issuing office.

14. Description of Amendment/Modification (*Organized by UCF section headings, including solicitation/contract subject matter where feasible.*)
. Accounting and Appropriations Schedule of the subject contract is hereby revised by addition of page 5P, attached:

	Contract Value	Total Sum Allotted
'revious Value	$27,810,017.19	$25,666,463.13
'his Action	142,225.06	143,659.06
Current Value	$27,952,242.25	$25,810,122.19

(Continued)

Except as provided herein, all terms and conditions of the document referenced in item 9A or 10A, as heretofore changed, remains unchanged and in full force and effect.

15A. Name and Title of Signer (*Type or Print*)	16A. Name and title of Contracting Officer (*Type or Print*)
	Penny S. Parker 228-688-1705 Contracting Officer Penny.Parker@noaa.gov
15B. Contractor/Offeror (Signature of person authorized to sign)	15C. Date Signed
16B. United States of America (Signature of Contracting Officer)	16C. Date Signed

NSN 7540-01-152-8070
PREVIOUS EDITIONS UNUSABLE

STANDARD FORM 30 (REV. 10-83)
Prescribed by GSA FAR (48 CFR) 53.243

Item No.	Supplies/Se s	Quantity	Unit	Unit Price	
	The modification details are listed beginning on page 3.				
0003	Second Option Year Estimated Cost	1	YR	10,555,690.25	10,555,690.25

This modification incorporates the following:

(a) SAIC's ARES Payload proposal, dated April 1, 2003, for the fabrication, functional testing and environmental stress testing of fourteen (14) ARES Payload IIs. The Firm Fixed Price for 14 units is [redacted] each for a total of [redacted] Special contract terms are as follows:

(1) The one-year repair warranty required under FAR 52.246-20 is exclusive of government furnished components and flaws in the engineering design. Any units returned for work to be performed under warranty shall be delivered by the government FOB SAIC, 4720 Hewes Avenue, Suite 105, Gulfport, Mississippi 39507, or be available for pick-up by SAIC at the National Data Buoy Center at Stennis Space Center. Upon completion of the warranty work, SAIC will deliver the unit(s) to NDBC at Stennis Space Center. SAIC will not be responsible for warranty pick-up from or delivery to other locations.

(2) Delivery is FOB Destination 150 days after award of this modification.

(3) The fixed-price clauses added in Modification No. 0068 for the ARES Payload II fabrication are applicable to the fabrication of these fourteen (14) units.

(4) The following ARES documents are added to the contract:
- (i) ARES Statement of Work (SOW) (Part 1 of 2), dated March 6, 2003;
- (ii) ARES Drawing Package (Part 2 of 2);
- (iii) ARES Functional Test (Green Tag Test);
- (iv) NDBC Standard Test Procedure for Electronic Equipment Environmental Stress Screening.

(5) The following Government Furnished Equipment (GFE) will be delivered FOB Destination SAIC's Gulfport Office, 4720 Hewes Avenue, Suite 105, Gulfport, Mississippi 39507.
- (i) Telonics GOES Transmitters;
- (ii) ARES Payload identification plates; and
- (iii) MIL-D-3464 desiccant packs.

(b) Block 16c contains the effective date of this modification.

(c) SAIC's firm-fixed price proposal, dated April 3, 2003, for the fabrication of one NOMAD buoy safety scaffold including labor and material for [redacted] The SOW for the NDBC/NTSC 6-meter buoy work scaffolding is incorporated into the contract.

(d) SAIC's Alaskan Buoy Network Expansion III proposal is hereby incorporated for the third and fourth Option Years.

(e) Incremental contract funding of $143,659.06.

SECTION B.1 SCOPE OF WORK, Paragraph (a), is hereby revised as follows:

Period	ST Hours	O/T Hours	Total Hours
07/01/00-06/30/01	[redacted]		
07/01/01-06/30/02			
07/01/02-06/30/03			
07/01/03-06/30/04			
07/01/04-06/30/05			

4. SECTION B.3 ESTIMATED AND ALLOWABLE COSTS—INCREMENTALLY FUNDED CONTRACT, Paragraphs (1), (2), and (3) are hereby revised as follows:

(a) Estimated Costs, Fee, and Sum Allotted

(1) Estimated cost, base fee, and potential award fee by contract period.

Period	Estimated Cost	Potential Award Fee
07/01/00-06/30/01	$7,863,162	$342,588
07/01/01-06/30/02	$9,533,390	$411,497
07/01/02-06/30/03	$10,555,690	$445,821
07/01/03-06/30/04	$9,664,298	$435,208
07/01/04-06/30/05	$9,645,902	$432,452

(2) Total contract value is computed as follows:

[redacted]

Fixed Price Work 463,204.25
Total Contract Value $27,952,242.25

(3) Total funds currently available for payment and allotted to this contract, in accordance with FAR clause 52.232-22, "Limitation of Funds," plus the estimated contract period covered by this amount:

Total Sum Allotted $25,810,122.19
[redacted]
Potential Award Fee $ 1,199,906.00
Estimated Period of Performance 07/01/2000 - 05/09/2003

5. SECTION B.4 PAYMENT FOR OVERTIME AND SEA PAY PREMIUMS

As provided in the clause of this contract entitled "Payment for Overtime Premiums" (FAR 52.222-2), the dollar amount of overtime authorized pursuant to said clause shall not exceed the amount specified below for the indicated period, provided also that such authorization shall have been given through the issuance of Technical Directives.

Performance Period	OT/Sea Pay Base Authorized	OT/Sea Pay Premium Authorized
07/01/00-06/30/01	[redacted]	
07/01/01-06/30/02		
07/01/02-06/30/03		
07/01/03-06/30/04		
07/01/04-06/30/05		

MOD	SUP	ACC/APP	AMOUNT	CUMULATIVE OBLIGATION	DATE
0091	S-91	1403A8M1JMWPA2230401020002006000095030000 25130000	$1,000,000.00 $1,000,000.00	$25,666,463.13	04/21/03
0092	S-92	1403A8M1JMWPDF2304010200020060000950200000 26190000	$ 100,000.00		
		1403A8M1JDBPAB2304010200120060000950200000 26190000	$ 12,529.06		
	S-93	1403A8M1JMWPKA2304010200020060000950300000 26190000	$ 19,000.00		
		1403A8M1JMWPKB2304010200020060000950300000 26190000	$ 4,600.00		
		1403A8M1JDBPAB2304010200120060000950200000 26190000	$ 7,530.00 $ 143,659.06	$25,810,122.19	04/28/03

Alaska Buoy Network Expansion
Part III
Statement of Work

Background:

NDBC is directed to establish five additional new buoy stations in the NWS Alaska Region. This is expected to bring the Alaska Buoy Network Expansion (ABNE) to completion with 15 new buoy stations (or an equivalent) installed. The new stations will directly support NWS' forecast & warning missions in that Region. This statement of work defines the broad requirements and schedule to be used as the basis for developing estimates. A plan and schedule detailing man-hours, travel, transportation, and material costs should be developed by NTSC in direct response to this statement of work and submitted along with cost estimates as a proposal. NDBC will use the proposal as a basis to modify the existing NTSC contract, and develop Technical Directives with specific tasking via Internal Work Requests.

Funding:

All funds to support this network expansion are available as FY2003 funds. Thus, estimated labor, travel, and material costs will be carried forward on the contract from year to year.

Locations:

This statement of work will outline NDBC's best estimate of work needed at various locations. This will reference scope of work changes to existing, ongoing work under previous contract modifications, and additional buoys/C-MAN stations needed to bring ABNE to completion.

Hulls and Equipment:

All stations are expected to have 6m VE hulls and configured (as noted) as single or dual payload buoys, or to have a C-MAN configuration similar to the stations being established in Lower Cook Inlet.

Schedule:

NDBC is expecting to complete all work detailed herein by November 1, 2004. If that is not possible due to Coast Guard support deficiencies, the schedule will be adjusted accordingly.

Staging:

Kodiak is expected to be the staging site for this work. However, it is possible that other locations could be used depending on availability of Coast Guard assets and how they will be used to support this project.

Vessel Support:
NDBC will be responsible to procure vessel support. Deployment needs are expected to be met by utilizing available Coast Guard assets. NTSC may utilize other commercial assets for shipping to staging locations on as needed basis, and where deemed cost effective.

Procurement:
NDBC will initiate procurement of major system components such as hulls, payloads, sensors, TDD's, etc. NTSC should include in their estimates the cost to procure other materials normally used to support the refurbishment/outfitting, integration, and testing activities such as batteries, mechanical hardware, cable, etc.

Network Maintenance:
Limited network maintenance is considered in this statement of work.

Network Spares:
Converting previously specified spares to meet specific station requirements is detailed in this statement of work.

Tasking:
1. Work scope changes related to ongoing work under existing contract modifications related to ABNE.
A. Configuration change for Bering Sea buoy to dual payload; build mooring; ship equipment and buoy; deploy at 46073 in Bering Sea.
B. Configuration change for buoy previously designated for Albatross bank to dual payload and reassign to Far Western Aleutians; build mooring; ship equipment and buoy; deploy at 46070 Far Western Aleutians location.
C. Configuration change for buoy previously designated as Spare to dual payload and reassign to to Chirikof Island; build mooring; ship equipment and buoy; deploy at 46076 Chirikof Island location.
D. No configuration change for buoy previously designated as Spare and reassign to Fox Island; build mooring; ship equipment and buoy; deploy at 46074 Fox Island location.

2. Additional buoys or C-MAN stations required to be built and installed beyond those designated in previous contract modifications for ABNE.
A. Build and install 2 C-MAN stations in Shelikof Straits on existing Coast Guard lights. Assume configuration of C-MAN stations will be similar to those in Lower Cook Inlet.
B. Build and install 1 C-MAN station in Western Prince William Sound on existing Coast Guard light. Assume configuration of C-MAN station is similar to those in Lower Cook Inlet.

Conflicts/Efficiencies:
NTSC is encouraged to identify conflicts and or recommend efficiencies that would impact the schedule or overall cost of the program.

Automated Reporting Environmental System (ARES) Payload

STATEMENT OF WORK

Part 1 of 2

Printed
March 19, 2003 (3:20pm)

1 INTRODUCTION

1.1 Background

The ARES was designed and built to autonomously acquire data from a specified set of sensors at regular intervals, process these data into geophysical units, format the data, and transmit the data over selected communication links. The ARES is required to operate as a fixed (land- or structure-based) platform or as a buoy station and is deployed for up to three years without maintenance or service. The types of sensors connected to the ARES include those measuring wind speed and direction, barometric pressure, air temperature, sea surface temperature, relative humidity, electronic compasses, visibility sensors and solar radiation sensors. The ARES will also process and transmit system housekeeping data including power system average voltage, average current, and current usage. The designed-in flexibility of the ARES permits configuration of the system to meet operational deployment requirements for land- and buoy-based stations. The ARES was designed by the National Data Buoy Center (NDBC), Stennis Space Center (SSC), MS. The design emphasized use of military and industrial grade, low-power, high-reliability components. NDBC-qualified Commercial-off-the-shelf (COTS) circuit boards were incorporated where possible. Custom circuit boards were designed and manufactured where necessary to meet the design requirements. Figure 1 illustrates the electronic and mechanical aspects of an ARES baseline system. The details of this ARES system are described by this statement of work, Part 1 and the ARES design drawings, Version E, Part 2.

1.1.1 ARES Signal Flow

This section will illustrate how the ARES functions by briefly describing power and data signal flows through the system.

1.1.1.1 Power Switching

In order to reduce overall power consumption, power to the system sensors and the ARES circuits is switched off wherever possible. The switching is done on a custom power supply circuit board under the control of the main processor board. When selected, the custom power supply circuit board switches power to sensors using individually addressable, bistable relays providing +5VDC, ± 12VDC, or ± 15VDC regulated power depending on sensor requirements. This power switching capability is an important characteristic of the ARES system.

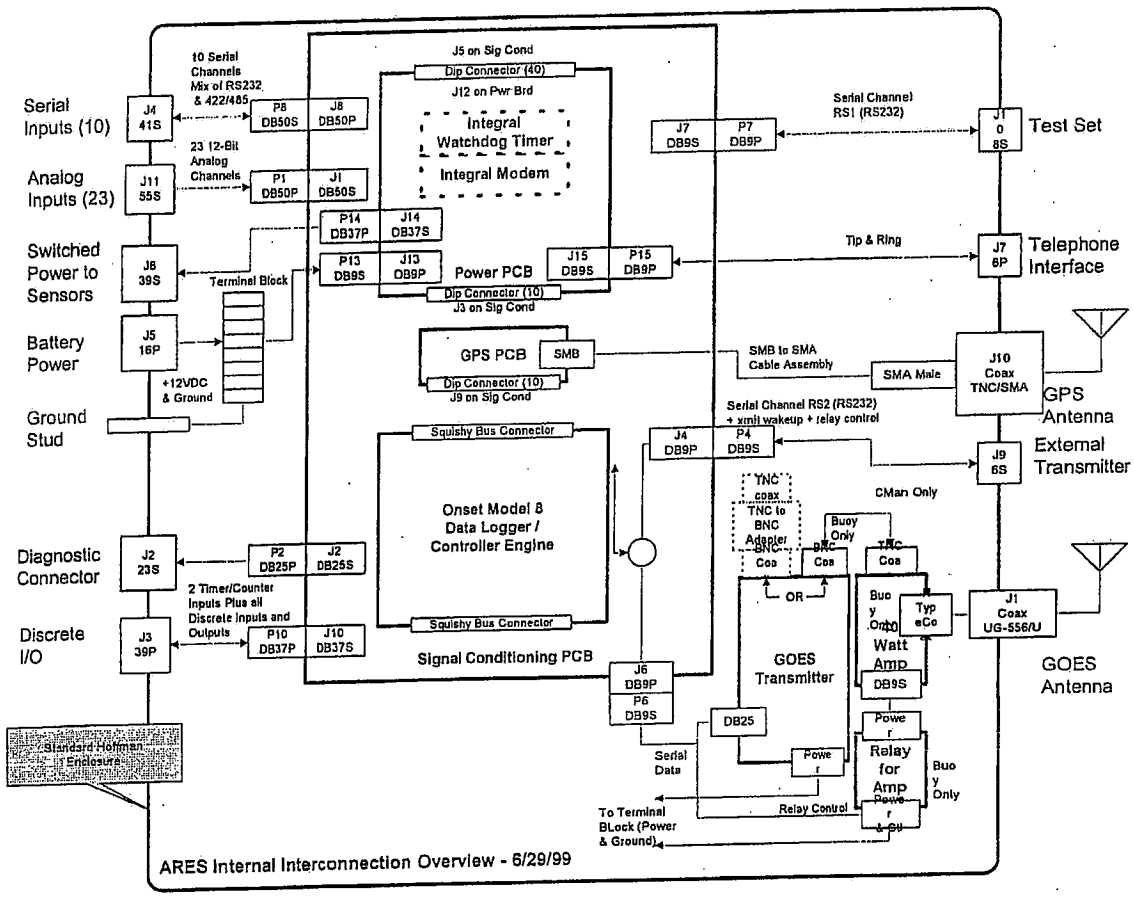

Figure 1. ARES Overview

1.1.1.2 Data Signals

Data from weather and oceanographic sensors are typically analog voltages, frequency based signals, digital input/output, or serial (RS-232/RS-422/RS-485) data streams. These signals are input to the ARES system via cables from a junction box where all sensor signals are connected to terminal strips. Analog voltages and frequency signals are conditioned using a custom ARES analog/counter signal conditioning section on the ARES motherboard. Once conditioned, the signals are routed to an A/D converter, in the case of analog signals, or read by the system processor, in the case of counter, digital input/output, and serial data streams. The signals are sampled at a 1 Hz rate, processed into geophysical units, averaged, formatted, and stored for data transmission. All meteorological sampling is accomplished during a precisely timed cycle (the "met" cycle) in such a way as to allow for synoptic data acquisition station-to-station. Selected data (wind speed, wind direction, and tide information) is sampled continuously with time-sliced averages being reported as part of the normal meteorological message.

1.1.1.3 Data Transmission

Meteorological data is formatted into messages and transmitted via satellite to NDBC for further processing, data quality verification, distribution to customers, and archival using a National Environmental Satellite, Data, and Information Service (NESDIS) certified Geostationary Operational Environmental Satellite (GOES) transmitter and power amplifier. The transmission is initiated under control of the main processor and the GOES transmitter internal real-time clock that is synchronized to Universal Time, Coordinated (UTC). Synchronization of the ARES system and GOES transmitter to UTC is guaranteed by correcting the GOES transmitter clock based on UTC as received by an embedded Global Positioning System (GPS) receiver board.

1.2 Deliverables

The contractor shall deliver functional ARES units. Each of the ARES units delivered shall be fabricated of identical parts as detailed in the ARES design drawings, Part 2 or government approved second source parts. Part 2 of this Statement of Work describes NDBC-qualified components, printed circuit boards (PCBs), and assemblies that have been used to assemble ARES production units and provides design drawings and fabrication instructions and notes. Parts and part numbers used to build ARES systems are listed on the drawings supplied in the ARES Statement of Work Part 2.

1.2.1 Delivered Quantities

A delivery quantity of fourteen (14) ARES units are required under this statement of work.

1.2.2 Delivery Schedule

The fourteen units shall be delivered 150 days after contract award. This delivery schedule is the government required delivery schedule. The contractor may optionally deliver the ARES units earlier than this date.

1.2.3 Electronic Parts

The attached ARES design drawings, Part 2 of this Statement of Work, describe NDBC-qualified components, PCBs, and assemblies that have been used to build ARES units. The contractor is responsible for procuring and providing all parts and materials necessary for fabrication with the exception of the Telonics GOES transmitter, TGT-1. The contractor shall use the components specified in the attached design drawings. Second source substitute parts require approval of the government.

1.3 Government Furnished Property

The following items are required by the contractor to test an assembled and fully functional ARES system or to assist the contractor in fabrication of an ARES unit. These items will be furnished to the contractor by the government.

1.3.1 Master ARES Executable Program File

NDBC shall provide one (1) copy of the Master ARES Executable Program File (*.AHX), version 2.00. This file is downloaded into flash EEPROM on the microprocessor board through the test set serial port using a file loader called CROSSCUT. Instructions will be provided for installing the Master ARES Executable Program File into ARES EEPROM, if required.

1.3.2 CROSSCUT ARES Executable Program File Loader

NDBC shall provide one (1) copy of the CROSSCUT file loader program. The CROSSCUT program executes in an MSDOS window under Windows 95/98. The CROSSCUT program is government licensed, commercial, copyrighted software and shall not be copied. The CROSSCUT program shall be returned to the government upon completion of executable file loading into the ARES units.

1.3.3 Payload Parameter Set File

NDBC shall provide a binary file to be loaded into the ARES unit to configure the system for proper operation with the installed hardware. Instructions for loading this file into an ARES system using a laptop or desktop PC will be provided. Use of this parameter set file is necessary for system testing and operation.

1.3.4 Cables and test equipment

NDBC shall provide the following cables and equipment required for testing in paragraph 4 of this statement of work to interconnect an ARES system to a laptop PC for Functional Testing (Green Tag Test) and environmental stress screening testing.

a. (1) ARES Power cable
b. (1) ARES Break Out Panel
c. (1) NDBC-3070 Universal Test Set Cable with extended Universal Test Set Adapter (4 ft)
d. (14) Telonics TGT-1 GOES transmitter
e. (14) ARES payload identification plates
f. (14) MIL-D-3464 desiccant packs
g. Parameter files for functional tests ARESTEST.TXT, ARESB.TXT, ARESE.TXT, and ARESC.TXT.

1.3.5 PCB Gerber files

The Government shall provide Gerber files required for fabrication of ARES Power Supply and Signal Conditioning PCBs.

2.0 APPLICABLE DOCUMENTS

2.1 Applicability

The following documents form a part of this statement of work to the extent specified herein. In the event of a conflict between the requirements of this statement of work and the referenced documents, the contents of this statement of work shall govern.

2.1.1. Government Documents

2.1.1.1 NOAA/NDBC Standards and Test Procedures

ETP 00-30, Rev. G ARES Functional Test (Green Tag Test)
NDBC-1102, Rev. C NDBC Standard Procedure for Electronic Equipment Environmental Stress Screening

2.1.2 Non-Government Documents

IPC/EIA J-STD-001C Requirements for Soldered Electrical & Electronic Assemblies.

IPC-A-610C Acceptability of Printed Board Assemblies

ANSI Y14.5M-82 Dimensioning and Tolerancing

EIA RS-232C-69 Data Terminal Equipment and Data Communication Equipment, Interface Between, Employing Serial Binary Data Interchange

EIA RS-422-A Electrical Characteristics of Balanced Voltage Digital Interface Circuits

2.2 Drawings

A complete set of ARES Version E design drawings is attached as ARES Statement of Work - Part 2. This package fully describes the components, modules, assemblies, construction, wiring, and physical layout of an ARES unit. The delivered ARES units shall conform to these drawings. Deviations from these drawings and parts called out in the design drawings are prohibited unless approved by the Government.

3.0 ARES REQUIREMENTS

3.1 General

The following paragraphs outline the functional and physical requirements that an ARES unit delivered under this contract shall meet.

3.1.1 System Description

3.1.1.1 Major Assemblies

An ARES unit is comprised of the following major assemblies.

3.1.1.1.1 Enclosure Assembly

The enclosure assembly includes a National Electrical Manufacturers Association (NEMA) enclosure, a mounting plate and other mechanical hardware for mounting and supporting the electronics PCBs, GOES transmitter, terminals and desiccant holder. The enclosure housing shall be capable of being purged and pressurized with nitrogen to 3.0 psi ± 0.5 psi. There are two custom circuit boards mounted in the enclosure and two COTs circuit boards mounted on the signal conditioning PCB. Signals are routed to external sensors with wire bundles from D-subminiature connectors on the two custom boards to MS connectors mounted in cutouts in the enclosure. Drawing 220000-001 in the ARES Statement of Work - Part 2 illustrates the enclosure. ARES units enclosures shall conform to the design specifications as shown on drawings 220001 through 220007 in the ARES Statement of Work - Part 2.

3.1.1.1.2 Electronics Assembly

The electronics assembly includes the power, signal conditioning, GPS, and processor PCBs. Sections 3.3 and 3.4 of this Statement of Work detail the electronics PCB requirements.

3.1.1.1.3 Transmitter Assembly

The transmitter assembly consists of the GOES transmitter, a power amplifier, and a Crydom solid state relay. The transmitter shall be a GFE, NESDIS certified, self-timed GOES transmitter with a power output of 10 Watts. The transmitter is provided serial data and control signals from the electronics assembly. Fourteen (14) GOES transmitter shall be furnished by the government for testing completed ARES payloads. The transmitter RF power shall be amplified to 40 W by a power amplifier and then routed to the enclosure RF output connector.

3.1.1.1.4 Internal Cable Assemblies

The internal cable assemblies include all power and signal cables within the ARES enclosure, as well as the connectors mounted on the ARES enclosure. Waterproof "MS" environmental connectors shall be used for all connectors on the enclosure.

3.1.1.2 Environmental Requirements

All system components and assemblies shall operate within the stresses and environmental conditions specified below. The non-operating environment includes shipment over long distances involving air transport and truck/jeep transport over rough terrain. Shock and vibration are important factors in the design. The delivered ARES units shall be rated to operate over the following environmental extremes.

a. Operating Air Temperature -- 40 °C to + 50 °C
b. Storage Air Temperature -- 60 °C to + 50 °C
c. Relative Humidity – Up to 100 percent, condensing, external to the ARES enclosure

3.2 Enclosure

The purpose of the ARES enclosure is to provide environmental physical shielding of the system assemblies. The enclosure tolerances are critical because of the nitrogen purging and pressurization requirement. The enclosure size and shape are designed to allow ARES to integrate into existing buoy- and land-based systems and are, therefore, critical.

3.2.1 Enclosure Specifications

The ARES uses a commercially available, off the shelf, Aluminum Clamp Cover Type 4X "NFAL" Junction Box. Holes for plugs, jacks, and studs shall be punched in conformance with drawing 220001-001 supplied in the ARES Statement of Work - Part 2.

3.2.2 Gasket Specification

The enclosure clamp cover shall be supplied with an Electromagnetic Interference-Radio Frequency Interference (EMI-RFI) gasket of closed-cell silicone rubber impregnated with conductive material compatible with aluminum surfaces. Note that the standard Hoffman enclosure described in 3.2.1 is not available with an EMI / RFI gasket. The Contractor shall replace the standard gasket with an EMI/RFI gasket that maintains the environmental integrity of the box.

3.2.3 Enclosure Coating and Labeling

The enclosure exterior shall be coated with a clear anodized coating. The gasket surface between the enclosure and the clamp cover shall be smooth, clean, bare metal. The enclosure shall be marked as to connector jack name and numbers, plug name and numbers, and shall include an identification plate in accordance with the drawings supplied in the ARES Statement of Work - Part 2 of 2, specifically, drawing number 220007. Location of the identification plate shall be as shown on drawing 220000-001 (location is same side as the breather valve, low and at the rear of the ARES enclosure). Identification plates shall be furnished by the Government.

3.2.4 Electronics Mounting Plate Assembly

The enclosure shall include an Electronics Mounting Plate Assembly conforming to drawing 220002-001, supplied in the ARES Statement of Work - Part 2. The Electronics Mounting Plate Assembly is dimensionally critical and shall be manufactured using the supplied drawings with adherence to the listed dimensions, applicable standards, and specifications under ANSI Y14.5M-82, Dimensioning and Tolerancing.

3.2.5 Desiccant Holder and Desiccant

Each ARES unit shall include a Desiccant Holder conforming to drawing 220004-001 supplied in the ARES Statement of Work - Part 2. The Desiccant Holder is dimensionally critical and shall be manufactured using drawing 220004-001 with adherence to the listed dimensions, applicable standards, and specifications under ANSI Y14.5M-82, Dimensioning and Tolerances. Each unit shall be delivered with a MIL-D-3464 Type I and II desiccant pack installed in the desiccant holder. Desiccant pack shall be retained in the desiccant holder using a nylon tie wrap. Desiccant packs shall be furnished by the government.

3.3 Custom PCBs

The ARES system contains two custom PCBs, the Power Supply PCB and the Signal Conditioning PCB. The following paragraphs describe these custom PCBs designed for ARES. Refer to the ARES Statement of Work - Part 2 for the appropriate schematics and layout drawings.

3.3.1 ARES Power Supply PCB

The ARES Power Supply PCB is a custom circuit board that contains a watchdog timer, modem, watchdog timer reference voltage, temperature sensor reference voltage, and power control and switching circuitry. In addition, it contains power connections to the ARES Signal Conditioning PCB and power conditioning for +5 VDC power, ±15 VDC power, reference voltage, and surge protection for +12VDC power. The purpose of the Power Supply PCB is to switch and condition power to the ARES Signal Conditioning PCB and ARES sensors. The Power Supply PCB receives commands from the Model 8 Processor board to switch power to ARES sensors using solid state relays. The Power Supply PCB shall conform to drawings 242000-001, 242001, 242002, and 242003 in the ARES Statement of Work - Part 2.

3.3.2 ARES Signal Conditioning PCB

The ARES Signal Conditioning PCB is the system 'motherboard'. The purpose of this board is to provide physical support and mounting for the Power Supply PCB and the two COTS PCBs, and to provide analog signal conditioning and multiplexing circuitry, counter circuits for wind sensors, address decoding and chip select circuits, line driver and receiver circuits for RS-232,

RS-422, and RS-485 serial input and outputs, driver circuits for discrete input/output, and power switching relay driver circuits. The Signal Conditioning PCB shall conform to drawings 241000-001, 241001, 241002, and 241003 in the ARES Statement of Work - Part 2.

3.3.3 Custom PCB Manufacturing

3.3.3.1 Physical Characteristics

Both custom PCBs are multi-layer, 0.157-cm (0.062-in) thick, through-hole, 62.2-gram (2-oz) minimum copper boards. Both PCBs are solder-mask-over-bare-copper (SMOBC).

3.3.3.2 Component Soldering Standards

Soldering quality and workmanship of all components soldered to the PCBs shall conform to IPC-A-610C, Acceptability of Printed Board Assemblies, Class 3, High Performance Electronic Products. IPC/EIA J-STD-001C, Requirements for Soldered Electrical & Electronic Assemblies, workmanship standards shall apply to all other assemblies.

3.4 COTS PCBs

3.4.1 COTS PCB Descriptions

The following sections describe the COTS circuit boards currently qualified and used to build ARES.

3.4.1.1 Model 8 Processor Board

The currently qualified processor board is the Onset Computer Corporation, Industrial Temperature Range Model 8 Single Board Computer, with 1 Megabyte static random access memory (SRAM), part number TT8-1Mv2, with TOM8 Monitor version 1.09f. Drawing 241000-001 in the ARES Statement of Work - Part 2 illustrates attachment of the Model 8 Processor board to the Signal Conditioning Board.

3.4.1.2 Global Positioning System Board and Antenna

The currently qualified Global Positioning System (GPS) Board is the Lassen SK II original equipment manufacturer's (OEM) board manufactured by Trimble Navigation, LTD., with firmware version 7.72 or higher, part number 38116-00. The GPS OEM board requires an active antenna with each unit. One GPS antenna shall be supplied by the contractor with each completed ARES units. The currently qualified antenna is manufactured by Trimble Navigation, LTD., part number 41566-00. Drawing 241000-001 in the ARES Statement of Work - Part 2 illustrates attachment of the GPS Board to the Signal Conditioning Board.

3.5 GOES Transmitter Section

3.5.1 Transmitter

Fourteen Telonics TGT-1 GOES transmitters shall be furnished by the Government for system testing. Each ARES payload shall be delivered with a TGT-1 transmitter installed.

3.5.1 Power Amplifier

Each ARES unit shall include a GOES transmitter power amplifier. The currently qualified power amplifier is the model 400 AMP-6G-46 available from WV Communications, Inc.

3.6 Internal Cable Construction

Internal cables shall be manufactured in accordance with drawings 230001-001 to 230016-001 included in the ARES Statement of Work - Part 2. The cables are fabricated using standard coaxial cables or wire. These cables terminate in MS connectors, DB connectors, and/or lug terminals.

4 QUALITY ASSURANCE PROVISION

4.1 Functional Tests

Each ARES unit is required to undergo an ARES Functional Test (Green Tag Test) at ambient temperature in accordance with ETP 00-30 revision G as a condition of acceptance. The contractor is responsible for performing this test on each ARES unit. The contractor shall provide documented evidence of the performance of this test in the form of a properly executed and signed data sheet from section 10 of ETP 00-30 revision G. The government may, at its option, witness any or all of the conduct of the ARES Functional Test (Green Tag Test) on each unit. The contractor shall provide the government sufficient advance notice of the conduct of each ARES Functional Test (Green Tag Test) to facilitate a government representative to witness the test should the government exercise the option. Advance notice should include sufficient time to allow any travel by the government representative. The government shall provide an ARES breakout test panel to the contractor to facilitate testing.

4.2 Environmental Stress Screening

The contractor shall perform environmental stress screening on two (2) ARES units. Environmental stress screening shall be conducted in accordance NDBC-1102, Rev. C, NDBC Standard Procedure for Electronic Equipment Environmental Stress Screening with the exception that the phrase 'There shall be no missed messages, good DAMS, or transmitted data quality, no parity errors, and no garbled data evident in data recorded or transmitted during any temperature soak cycles" in paragraph 7.4 of NDBC1102, Rev. C shall be deleted and replaced with the phrase "No more than 15% of the data messages transmitted or recorded during temperature soak cycles shall be missing, garbled, have poor transmitted DAMS, poor transmitted data quality or parity errors." Environmental stress screening (ESS) shall be

performed on units that have successfully completed ETP 00-30, Rev. G. ARES Functional Test (Green Tag Test) at ambient temperature prior to beginning the ESS test. ETP 00-30, Rev. G, ARES Functional Test (Green Tag Test) shall be repeated on each unit undergoing ESS testing at the end of the temperature soak at -35 degrees Celsius (step 7 from the temperature profile table in paragraph 7.1 of NDBC-1102) and at the end of the +50 degrees Celsius temperature soak (step 9 from the temperature profile table in paragraph 7.1 of NDBC-1102). The government shall provide an ARES breakout test panel to the contractor to facilitate environmental stress screening. The units to be tested will be selected at random by the government after construction and assembly of all 14 units have been completed. Upon selection of a unit by the government for environmental stress screening, the unit shall remain in a 'hands-off' state except as provided for in NDBC-1102, Rev. C for correcting any test failures until completion of the environmental stress screening tests. The contractor shall provide documented evidence of the performance of this test in the form of properly executed and signed data sheets (3 each, 1 from the completion of ETP 00–030, Rev. G at ambient temperature, one from the completion of ETP 00-030, Rev. G at -35 degrees Celsius, and one from the completion of ETP 00-030, Rev. G at +50 degrees Celsius) from section 10 of ETP 00-030 revision G and a statement regarding transmission quality of data throughout the period of the ESS test. The government may, at its option, witness any or all of the environmental stress screening tests. In the event the government exercises the option to witness the environmental stress screening tests, a test schedule shall be negotiated to facilitate government attendance taking travel and work schedules into account. In the event of a failure of a unit of any part of the environmental stress screening test, testing shall be halted, corrective active taken, and testing restarted from the beginning of NDBC-1102 and this paragraph. If necessary, the testing schedule shall be renegotiated.

4.3 Visual Inspection of Custom Modules and PCBs

Each module and PCB shall be visually inspected by the contractor for conformance to the design and for workmanship specified herein. This inspection shall precede any ARES unit final assembly. Written evidence shall be provided documenting this inspection. The government may, at its option, have a representative present during the visual inspection of the circuit PCBs.

4.4 Responsibility for Inspections

The contractor shall be responsible for conducting the functional tests, environmental stress screening tests, and visual inspections described in paragraphs 4.1, 4.2, and 4.3.

5.0 PREPARATION FOR DELIVERY

5.1 Packaging

Industry standard packaging shall be used to protect the completed units from weather, shock, and vibration during shipping to NDBC.

5.2 MS Connector Protection

All installed MS connectors without external cables attached shall be covered with a plastic cap of the appropriate size to protect the connector from damage due to weather or impact during shipping.

AMENDMENT OF SOLICITATION/MODIFICATION OF CONTRACT

1. Contract ID Code	Page	of Pages
	1	5

Amendment/Modification No.	3. Effective Date	4. Requisition/Purchase Req. No.	5. Project No. (if applicable)
0092	Apr 28, 2003	NWWG9502-3-33563	

6. Issued By — Code WG953023
NATIONAL DATA BUOY CENTER
RESOURCES BRANCH
BLDG 1100, W/OPS53
STENNIS SPACE CENTER MS 39529-6000
Penny S. Parker 228-688-1705

7. Administered By (If other than Item 6) — Code
SEE BLOCK 6

8. Name and Address of Contractor (*No., Street, County, and Zip Code*)

SCIENCE APPLICATIONS INTERNTL
BUILDING 3205
STENNIS SPACE CENTER MS 39529-6000
ATTN: MS. PAMALA HATTAWAY
(228) 688-1830

Vendor ID: 00027009
DUNS: 054781240
CAGE:

(X)	
	9A. Amendment of Solicitation No.
	9B. Date (*See Item 11*)
X	10A. Modification of Contract/Order No. 50QANW000402
	10B. Date (*See Item 13*) May 18, 2000

Code	Facility Code

11. THIS ITEM ONLY APPLIES TO AMENDMENTS OF SOLICITATIONS

☐ The above numbered solicitation is amended as set forth in item 14. The hour and date specified for receipt of Offers ☐ is extended ☐ is not extended. Offers must acknowledge receipt of this amendment prior to the hour and date specified in the solicitation or as amended, by one of the following methods: (a) By completing items 8 and 15, and returning ____ copies of the amendment; (b) By acknowledging receipt of this amendment on each copy of the offer submitted; or (c) By separate letter or telegram which includes a reference to the solicitation and amendment numbers. FAILURE OF YOUR ACKNOWLEDGMENT TO BE RECEIVED AT THE PLACE DESIGNATED FOR THE RECEIPT OF OFFERS PRIOR TO THE HOUR AND DATE SPECIFIED MAY RESULT IN REJECTION OF YOUR OFFER. If by virtue of this amendment you desire to change an offer already submitted, such change may be made by telegram or letter, provided each telegram or letter makes reference to the solicitation and this amendment, and is received prior to the opening hour and date specified.

12. Accounting and Appropriation Data (*if required*)
$ US 143,659.06

13. THIS ITEM APPLIES ONLY TO MODIFICATIONS OF CONTRACT/ORDERS.
IT MODIFIES THE CONTRACT/ORDER NO. AS DESCRIBED IN ITEM 14.

☐	A. This change order is issued pursuant to: (*Specify authority*) The changes set forth in item 14 are made in the Contract Order No. in item 10A.
☐	B. The above numbered Contract/Order is modified to reflect the administrative changes (*such as changes in paying office, appropriation date, etc.*) Set fourth item 14, pursuant to the authority of FAR 43.103 (b)
X	C. This supplemental agreement is entered into pursuant to authority of: Under scope, within terms and conditions of contract; by mutual agreement.
X	D. Other (*Specify type of modification and authority*) FAR - 52.232-22 - "Limitation of Funds."

E. IMPORTANT: Contractor ☐ is not, ☒ is required to sign this document and return 3 copies to the issuing office.

14. Description of Amendment/Modification (*Organized by UCF section headings, including solicitation/contract subject matter where feasible.*)

1. Accounting and Appropriations Schedule of the subject contract is hereby revised by addition of page 5P, attached:

	Contract Value	Total Sum Allotted
Previous Value	$27,810,017.19	$25,666,463.13
This Action	142,225.06	143,659.06
Current Value	$27,952,242.25	$25,810,122.19

(Continued)

Except as provided herein, all terms and conditions of the document referenced in item 9A or 10A, as heretofore changed, remains unchanged and in full force and effect.

15A. Name and Title of Signer (*Type or Print*)	16A. Name and title of Contracting Officer (*Type or Print*)
Pamala J. Hattaway Contracts Representative	Penny S. Parker 228-688-1705 Contracting Officer Penny.Parker@noaa.gov

15B. Contractor/Offeror	15C. Date Signed	16B. United States of America	16C. Date Signed
Pamala J. Hattaway (Signature of person authorized to sign)	5/1/03	(Signature of Contracting Officer)	5/5/03

SCHEDULE

ɔ.	Supplies/Services	Quantity	Unit	Unit Price	Amount
,003	The modification details are listed beginning on page 3. Second Option Year Estimated Cost	1	YR	10,555,690.25	10,555,690.25

2. This modification incorporates the following:
(a) SAIC's ARES Payload proposal, dated April 1, 2003, for the fabrication, functional testing and environmental stress testing of fourteen (14) ARES Payload IIs. The Firm Fixed Price for 14 units is [redacted] each for a total of [redacted] Special contract terms are as follows:
(1) The one-year repair warranty required under FAR 52.246-20 is exclusive of government furnished components and flaws in the engineering design. Any units returned for work to be performed under warranty shall be delivered by the government FOB SAIC, 4720 Hewes Avenue, Suite 105, Gulfport, Mississippi 39507, or be available for pick-up by SAIC at the National Data Buoy Center at Stennis Space Center. Upon completion of the warranty work, SAIC will deliver the unit(s) to NDBC at Stennis Space Center. SAIC will not be responsible for warranty pick-up from or delivery to other locations.
(2) Delivery is FOB Destination 150 days after award of this modification.
(3) The fixed-price clauses added in Modification No. 0068 for the ARES Payload II fabrication are applicable to the fabrication of these fourteen (14) units.
(4) The following ARES documents are added to the contract:
(i) ARES Statement of Work (SOW) (Part 1 of 2), dated March 6, 2003;
(ii) ARES Drawing Package (Part 2 of 2);
(iii) ARES Functional Test (Green Tag Test);
(iv) NDBC Standard Test Procedure for Electronic Equipment Environmental Stress Screening.
(5) The following Government Furnished Equipment (GFE) will be delivered FOB Destination SAIC's Gulfport Office, 4720 Hewes Avenue, Suite 105, Gulfport, Mississippi 39507.
(i) Telonics GOES Transmitters;
(ii) ARES Payload identification plates; and
(iii) MIL-D-3464 desiccant packs.
(b) Block 16c contains the effective date of this modification.
(c) SAIC's firm-fixed price proposal, dated April 3, 2003, for the fabrication of one NOMAD buoy safety scaffold including labor and material for [redacted] The SOW for the NDBC/NTSC 6-meter buoy work scaffolding is incorporated into the contract.
(d) SAIC's Alaskan Buoy Network Expansion III proposal is hereby incorporated for the third and fourth Option Years.
(e) Incremental contract funding of $143,659.06.

3. SECTION B.1 SCOPE OF WORK, Paragraph (a), is hereby revised as follows:

Period	ST Hours	O/T Hours	Total Hours
07/01/00-06/30/01	[redacted]		
07/01/01-06/30/02			
07/01/02-06/30/03			
07/01/03-06/30/04			
07/01/04-06/30/05			

4. SECTION B.3 ESTIMATED AND ALLOWABLE COSTS—INCREMENTALLY FUNDED CONTRACT, Paragraphs (1), (2), and (3) are hereby revised as follows:

(a) Estimated Costs, Fee, and Sum Allotted

(1) Estimated cost, base fee, and potential award fee by contract period.

Period	Estimated Cost	Potential Award Fee
07/01/00-06/30/01	$7,863,162	$342,588
07/01/01-06/30/02	$9,533,390	$411,497
07/01/02-06/30/03	$10,555,690	$445,821
07/01/03-06/30/04	$9,664,298	$435,208
07/01/04-06/30/05	$9,645,902	$432,452

(2) Total contract value is computed as follows:

[redacted]	
Fixed Price Work	463,204.25
Total Contract Value	$27,952,242.25

(3) Total funds currently available for payment and allotted to this contract, in accordance with FAR clause 52.232-22, "Limitation of Funds," plus the estimated contract period covered by this amount:

Total Sum Allotted	$25,810,122.19
[redacted]	[redacted]
Potential Award Fee	$ 1,199,906.00
Estimated Period of Performance	07/01/2000 - 05/09/2003

5. SECTION B.4 PAYMENT FOR OVERTIME AND SEA PAY PREMIUMS

As provided in the clause of this contract entitled "Payment for Overtime Premiums" (FAR 52.222-2), the dollar amount of overtime authorized pursuant to said clause shall not exceed the amount specified below for the indicated period, provided also that such authorization shall have been given through the issuance of Technical Directives.

Performance Period	OT/Sea Pay Base Authorized	OT/Sea Pay Premium Authorized
07/01/00-06/30/01	[redacted]	
07/01/01-06/30/02		
07/01/02-06/30/03		
07/01/03-06/30/04		
07/01/04-06/30/05		

MOD	SUP	ACC/APP	AMOUNT	CUMULATIVE OBLIGATION	DATE
0091	S-91	1403A8M1JMWPA2230401020002006000095030000 25130000	$1,000,000.00 $1,000,000.00	$25,666,463.13	04/21/03
0092	S-92	1403A8M1JMWPDF2304010200020060000950200000 26190000	$ 100,000.00		
		1403A8M1JDBPAB2304010200120060000950200000 26190000	$ 12,529.06		
	S-93	1403A8M1JMWPKA2304010200020060000950300000 26190000	$ 19,000.00		
		1403A8M1JMWPKB2304010200020060000950300000 26190000	$ 4,600.00		
		1403A8M1JDBPAB2304010200120060000950200000 26190000	$ 7,530.00 $ 143,659.06	$25,810,122.19	04/28/03

AMENDMENT OF SOLICITAT N/MODIFICATION OF CONTRAC

1. Contract ID Code	Page	of Pages
	1	5

2. Amendment/Modification No.	3. Effective Date	4. Requisition/Purchase Req. No.	5. Project No. (If applicable)
0093	May 13, 2003	NWWG9503-3-33612	

6. Issued By	Code	7. Administered By (If other than Item 6)	Code
NATIONAL DATA BUOY CENTER RESOURCES BRANCH BLDG 1100, W/OPS53 STENNIS SPACE CENTER MS 39529-6000 Penny S. Parker 228-688-1705	WG953023	SEE BLOCK 6	

8. Name and Address of Contractor (No., Street, County, and Zip Code)		(X)	9A. Amendment of Solicitation No.
SCIENCE APPLICATIONS INTERNTL BUILDING 3205 STENNIS SPACE CENTER MS 39529-6000 ATTN: MS. PAMALA HATTAWAY (228) 688-1830	Vendor ID: 00027009 DUNS: 054781240 CAGE:		9B. Date (See Item 11)
		X	10A. Modification of Contract/Order No. 50QANW000402
			10B. Date (See Item 13) May 18, 2000

Code	Facility Code

11. THIS ITEM ONLY APPLIES TO AMENDMENTS OF SOLICITATIONS

[ ] The above numbered solicitation is amended as set forth in item 14. The hour and date specified for receipt of Offers [ ] is extended [ ] is not extended. Offers must acknowledge receipt of this amendment prior to the hour and date specified in the solicitation or as amended, by one of the following methods: (a) By completing items 8 and 15, and returning ____ copies of the amendment; (b) By acknowledging receipt of this amendment on each copy of the offer submitted; or (c) By separate letter or telegram which includes a reference to the solicitation and amendment numbers. FAILURE OF YOUR ACKNOWLEDGMENT TO BE RECEIVED AT THE PLACE DESIGNATED FOR THE RECEIPT OF OFFERS PRIOR TO THE HOUR AND DATE SPECIFIED MAY RESULT IN REJECTION OF YOUR OFFER. If by virtue of this amendment you desire to change an offer already submitted, such change may be made by telegram or letter, provided each telegram or letter makes reference to the solicitation and this amendment, and is received prior to the opening hour and date specified.

12. Accounting and Appropriation Data *(if required)*
$ US 70,488.70

13. THIS ITEM APPLIES ONLY TO MODIFICATIONS OF CONTRACT/ORDERS.
IT MODIFIES THE CONTRACT/ORDER NO. AS DESCRIBED IN ITEM 14.

(x)	A. This change order is issued pursuant to: *(Specify authority)* The changes set forth in item 14 are made in the Contract Order No. in item 10A.
	B. The above numbered Contract/Order is modified to reflect the administrative changes *(such as changes in paying office, appropriation date, etc.)* Set fourth item 14, pursuant to the authority of FAR 43.103 (b)
X	C. This supplemental agreement is entered into pursuant to authority of: Under scope, within terms and conditions of contract; by mutual agreement.
X	D. Other *(Specify type of modification and authority)* FAR 52.232-22 - "LIMITATION OF FUNDS."

E. IMPORTANT: Contractor [ ] is not, [X] is required to sign this document and return 3 copies to the issuing office.

. Description of Amendment/Modification *(Organized by UCF section headings, including solicitation/contract subject matter where feasible.)*

Accounting and Appropriations Schedule of the subject contract is hereby revised by addition of page 5P, attached:

	Contract Value	Total Sum Allotted
revious Value	$27,952,242.25	$25,810,122.19
his Action	93,000.00	70,488.70
urrent Value	$28,045,242.25	$25,880,610.89

(Continued)

Except as provided herein, all terms and conditions of the document referenced in item 9A or 10A, as heretofore changed, remains unchanged and in full force and effect.

15A. Name and Title of Signer *(Type or Print)*		16A. Name and title of Contracting Officer *(Type or Print)*	
Pamala J. Hattaway Contracts Representative		Penny S. Parker Contracting Officer Penny.Parker@noaa.gov	228-688-1705
15B. Contractor/Offeror Pamala J. Hattaway (Signature of person authorized to sign)	15C. Date Signed 5/15/03	16B. United States of America Penny S. Parker (Signature of Contracting Officer)	16C. Date Signed 5/15/03

SCHEDULE

No.	Supplies/Services	Quantity	Unit	Unit Price	Amount
	The modification details are listed beginning on page 3.				
003	Second Option Year Estimated Cost	1	YR	10,648,690.25	10,648,690.25

2. This modification incorporates the following:
(a) Section B.2(b), addition of the [redacted]
(b) correction of Modifications Numbers 89 through 92, Section B.1(a), Total Hours SAIC, from [redacted]
(c) Section B.1(a) addition of [redacted] of SAIC exempt uncompensated hours; and
(e) incremental contract funding of $70,488.70.

3. SECTION B.1 SCOPE OF WORK, Paragraph (a), is hereby revised as follows:

Period	ST Hours	O/T Hours	Total Hours
07/01/00-06/30/01	[redacted]		
07/01/01-06/30/02			
07/01/02-06/30/03			
07/01/03-06/30/04			
07/01/04-06/30/05			

4. SECTION B.2 AWARD FEE is hereby amended to read as follows:

Period	Award Fee Period	Cumulative Award Fee
01/04/03-03/38/03	[redacted]	

5. SECTION B.3 ESTIMATED AND ALLOWABLE COSTS-INCREMENTALLY FUNDED CONTRACT, Paragraphs (1), 2, and (3) are hereby revised as follows:
(a) Estimated Costs, Fee, and Sum Allotted

(1) Estimated cost, base fee, and potential award fee by contract period.

Period	Estimated Cost	Potential Award Fee
07/01/00-06/30/01	$7,863,162	$342,588
07/01/01-06/30/02	$9,533,390	$411,497
07/01/02-06/30/03	$10,648,690	$445,821
07/01/03-06/30/04	$9,664,298	$435,208
07/01/04-06/30/05	$9,645,902	$432,452

(2) Total contract value is computed as follows:

[redacted]	
Fixed Price Work	463,204.25
Total Contract Value	$28,045,242.25

(3) Total funds currently available for payment and allotted to this contract, in accordance with FAR clause 52.232-22, "Limitation of Funds," plus the estimated contract period covered by this amount:

Total Sum Allotted	$25,880,610.89
[redacted]	
Potential Award Fee	$ 1,199,906.00
Estimated Period of Performance	07/01/2000 - 05/09/2003

(Continued on Page 5P)

MOD	SUP	ACC/APP	AMOUNT	CUMULATIVE OBLIGATION	DATE
0091	S-91	1403A8M1JMWPA2230401020002006000095030000	$1,000,000.00		
		25130000	$1,000,000.00	$25,666,463.13	04/21/03
0092	S-92	1403A8M1JMWPDF2304010200020060000095020000	$ 100,000.00		
		26190000			
		1403A8M1JDBPAB2304010200120060000095020000	$ 12,529.06		
		26190000			
	S-93	1403A8M1JMWPKA2304010200020060000095030000	$ 19,000.00		
		26190000			
		1403A8M1JMWPKB2304010200020060000095030000	$ 4,600.00		
		26190000			
		1403A8M1JDBPAB2304010200120060000095020000	$ 7,530.00		
		26190000	$ 143,659.06	$25,810,122.19	04/28/03
0093	S-94	14034RM1JMEPRP0704010200020060000095030000	$ 1,000.00		
		26190000			
		14034BM1JSLPR7060401020002006000095030000	$ 1,933.00		
		26190000			
		14034RM1JMEPRP0704010200020060000095030000	$ 4,000.00		
		25130000			
		14034BM1J60PRG0604010200020060000095030000	$ 5,688.70		
		26190000			
		14034RM1J47PRB0704010200020060000095030000	$ 12,867.00		
		26190000			
		14034BM1JSLPR7060401020002006000095030000	$ 13,000.00		
		25130000			
		1403A8M1JMWPGC2304010200020060000095030000	$ 32,000.00		
		26190000	$ 70,488.70	$25,880,610.89	05/13/03

AMENDMENT OF SOLICITATION/MODIFICATION OF CONTRACT

1. Contract ID Code	Page	of Pages
	1	4

2. Amendment/Modification No.	3. Effective Date	4. Requisition/Purchase Req. No.	5. Project No. (if applicable)
0094	May 22, 2003	NWWG9530-3-34176	

6. Issued By	Code	7. Administered By (If other than Item 6)	Code
NATIONAL DATA BUOY CENTER RESOURCES BRANCH BLDG 1100, W/OPS53 STENNIS SPACE CENTER MS 39529-6000 Penny S. Parker 228-688-1705	WG953023	SEE BLOCK 6	

8. Name and Address of Contractor (*No., Street, County, and Zip Code*)	(X)	9A. Amendment of Solicitation No.
SCIENCE APPLICATIONS INTERNTL BUILDING 3205 STENNIS SPACE CENTER MS 39529-6000 ATTN: MS. PAMALA HATTAWAY (228) 688-1830 Vendor ID: 00027009 DUNS: 054781240 CAGE:		9B. Date (*See Item 11*)
	X	10A. Modification of Contract/Order No. 50QANW000402
		10B. Date (*See Item 13*) May 18, 2000

Code	Facility Code

11. THIS ITEM ONLY APPLIES TO AMENDMENTS OF SOLICITATIONS

☐ The above numbered solicitation is amended as set forth in item 14. The hour and date specified for receipt of Offers ☐ is extended ☐ is not extended. Offers must acknowledge receipt of this amendment prior to the hour and date specified in the solicitation or as amended, by one of the following methods: (a) By completing items 8 and 15, and returning ____ copies of the amendment; (b) By acknowledging receipt of this amendment on each copy of the offer submitted; or (c) By separate letter or telegram which includes a reference to the solicitation and amendment numbers. FAILURE OF YOUR ACKNOWLEDGMENT TO BE RECEIVED AT THE PLACE DESIGNATED FOR THE RECEIPT OF OFFERS PRIOR TO THE HOUR AND DATE SPECIFIED MAY RESULT IN REJECTION OF YOUR OFFER. If by virtue of this amendment you desire to change an offer already submitted, such change may be made by telegram or letter, provided each telegram or letter makes reference to the solicitation and this amendment, and is received prior to the opening hour and date specified.

12. Accounting and Appropriation Data (*if required*)
$ US 560,132.07

13. THIS ITEM APPLIES ONLY TO MODIFICATIONS OF CONTRACT/ORDERS.
IT MODIFIES THE CONTRACT/ORDER NO. AS DESCRIBED IN ITEM 14.

(x)	A. This change order is issued pursuant to: (*Specify authority*) The changes set forth in item 14 are made in the Contract Order No. in item 10A.
	B. The above numbered Contract/Order is modified to reflect the administrative changes (*such as changes in paying office, appropriation date, etc.*) Set fourth item 14, pursuant to the authority of FAR 43.103 (b)
	C. This supplemental agreement is entered into pursuant to authority of:
X	D. Other (*Specify type of modification and authority*) FAR 52.232-22 - "LIMITATION OF FUNDS."

E. IMPORTANT: Contractor [X] is not, [ ] is required to sign this document and return ____ copies to the issuing office.

14. Description of Amendment/Modification (*Organized by UCF section headings, including solicitation/contract subject matter where feasible.*)

1. Accounting and Appropriations Schedule of the subject contract is hereby revised by adition of page 4Q, attached:

	Contract Value	Total Sum Allotted
Previous Value	$28,045,242.25	$25,880,610.89 ✓
This Action	- 0 -	560,132.07 ✓
Current Value	$28,045,242.25 ✓	$26,440,742.96 ✓

(Continued)

Except as provided herein, all terms and conditions of the document referenced in item 9A or 10A, as heretofore changed, remains unchanged and in full force and effect.

15A. Name and Title of Signer (*Type or Print*)		16A. Name and title of Contracting Officer (*Type or Print*)	
		Penny S. Parker Contracting Officer Penny.Parker@noaa.gov	228-688-1705
15B. Contractor/Offeror (Signature of person authorized to sign)	15C. Date Signed	16B. United States of America Original Signed by (Signature of Contracting Officer)	16C. Date Signed 5/22/03

SCHEDULE

No.	Supplies/Services	Quantity	Unit	Unit Price	Amount
	The modification details are listed beginning on page 3.				
0003	Second Option Year Estimated Cost	1	YR	10,648,690.25	10,648,690.25

2. This modification incorporates incremental contract funding of $560,132.07.

3. SECTION B.3 ESTIMATED AND ALLOWABLE COSTS-INCREMENTALLY FUNDED CONTRACT, Paragraph (3) is hereby revised as follows:

(a) Estimated Costs, Fee, and Sum Allotted

(1) Estimated cost, base fee, and potential award fee by contract period.

Period	Estimated Cost	Potential Award Fee
07/01/00-06/30/01	$7,863,162	$342,588
07/01/01-06/30/02	$9,533,390	$411,497
07/01/02-06/30/03	$10,648,690	$445,821
07/01/03-06/30/04	$9,664,298	$435,208
07/01/04-06/30/05	$9,645,902	$432,452

(2) Total contract value is computed as follows:

[redacted]

Fixed Price Work	463,204.25
Total Contract Value	$28,045,242.25

(3) Total funds currently available for payment and allotted to this contract, in accordance with FAR clause 52.232-22, "Limitation of Funds," plus the estimated contract period covered by this amount:

Total Sum Allotted	$26,440,742.96
[redacted]	
Potential Award Fee	$ 1,199,906.00
Estimated Period of Performance	07/01/2000 - 05/30/2003

(Continued on page 4Q)

MOD	SUP	ACC/APP	AMOUNT	CUMULATIVE OBLIGATION	DATE
0094	S-95	1403A8M1JDBPAB230401020012006000095030000 25130000	$ 378,000.00		
		1403A8M1JDBPAB230401020012006000095030000 26190000	$ 119,000.00		
		1403A8M1JMWPGC230401020002006000095030000 26190000	$ 55,825.00		
		14034BM1JSMPR6060401020002006000095030000 25130000	$ 5,482.76		
		14034BM1JSMPR6060401020002006000095030000 26190000	$ 1,824.31		
			$ 560,132.07	$26,440,742.96	05/22/03

AMENDMENT OF SOLICITATION/MODIFICATION OF CONTRACT

1. Contract ID Code	Page	of Pages
	1	27

2. Amendment/Modification No.	3. Effective Date	4. Requisition/Purchase Req. No.	5. Project No. (if applicable)
0095	May 31, 2003	NWWG9500-3-34179	

6. Issued By — Code WG953023
:IONAL DATA BUOY CENTER
RESOURCES BRANCH
BLDG 1100, W/OPS53
STENNIS SPACE CENTER MS 39529-6000
Penny S. Parker 228-688-1705

7. Administered By (If other than Item 6) — Code
SEE BLOCK 6

8. Name and Address of Contractor (*No., Street, County, and Zip Code*)

SCIENCE APPLICATIONS INTERNTL
BUILDING 3205
STENNIS SPACE CENTER MS 39529-6000
ATTN: MS. PAMALA HATTAWAY
(228) 688-1830

Vendor ID: 00027009
DUNS: 054781240
CAGE:

(X)	
	9A. Amendment of Solicitation No.
	9B. Date (*See Item 11*)
X	10A. Modification of Contract/Order No. 50QANW000402
	10B. Date (*See Item 13*) May 18, 2000

Code	Facility Code

11. THIS ITEM ONLY APPLIES TO AMENDMENTS OF SOLICITATIONS

☐ The above numbered solicitation is amended as set forth in item 14. The hour and date specified for receipt of Offers ☐ is extended ☐ is not extended. Offers must acknowledge receipt of this amendment prior to the hour and date specified in the solicitation or as amended, by one of the following methods: (a) By completing items 8 and 15, and returning ____ copies of the amendment; (b) By acknowledging receipt of this amendment on each copy of the offer submitted; or (c) By separate letter or telegram which includes a reference to the solicitation and amendment numbers. FAILURE OF YOUR ACKNOWLEDGMENT TO BE RECEIVED AT THE PLACE DESIGNATED FOR THE RECEIPT OF OFFERS PRIOR TO THE HOUR AND DATE SPECIFIED MAY RESULT IN REJECTION OF YOUR OFFER. If by virtue of this amendment you desire to change an offer already submitted, such change may be made by telegram or letter, provided each telegram or letter makes reference to the solicitation and this amendment, and is received prior to the opening hour and date specified.

12. Accounting and Appropriation Data (*if required*)
See Schedule $ US 437,070.00

13. THIS ITEM APPLIES ONLY TO MODIFICATIONS OF CONTRACT/ORDERS.
IT MODIFIES THE CONTRACT/ORDER NO. AS DESCRIBED IN ITEM 14.

	A. This change order is issued pursuant to: (*Specify authority*) The changes set forth in item 14 are made in the Contract Order No. in item 10A.
	B. The above numbered Contract/Order is modified to reflect the administrative changes (*such as changes in paying office, appropriation date, etc.*) Set fourth item 14, pursuant to the authority of FAR 43.103 (b)
	C. This supplemental agreement is entered into pursuant to authority of:
X	D. Other (*Specify type of modification and authority*) FAR 52.217-9 - "Option to Extend the Term of the Contract" & 52.232-22 - "Limitation of Funds."

E. IMPORTANT: Contractor [X] is not, [ ] is required to sign this document and return ____ copies to the issuing office.

14. Description of Amendment/Modification (*Organized by UCF section headings, including solicitation/contract subject matter where feasible.*)

1. Accounting and Appropriations Schedule of the subject contract is hereby revised by addition of page 5Q, attached:

	Contract Value	Total Sum Allotted
Previous Value	$28,045,242.25	$26,440,742.96
This Action	9,664,298.00	437,070.00
Current Value	$37,709,540.25	$26,877,812.96

(Continued)

Except as provided herein, all terms and conditions of the document referenced in item 9A or 10A, as heretofore changed, remains unchanged and in full force and effect.

15A. Name and Title of Signer (*Type or Print*)		16A. Name and title of Contracting Officer (*Type or Print*) Penny S. Parker 228-688-1705 Contracting Officer Penny.Parker@noaa.gov	
15B. Contractor/Offeror	15C. Date Signed	16B. United States of America Original Signed by	16C. Date Signed JUN 0 4 2003
(Signature of person authorized to sign)		(Signature of Contracting Officer)	

SCHEDULE

Item No.	Supplies/Services	Quantity	Unit	Unit Price	Amount
0004	The modificaiton details are listed beginning on page 3. Third Option Year Estimated Cost Accounting and Appropriation Data: 14.03.A8M1JMWPA223040102000.20060000950 30000.25130000 US 437,070.00	1	YR	9,664,298.00	9,664,298.00

2. This modification incorporates the following: (a) Section I.6, exercise of the Third Option Year of this contract; (b) Section F.2, extend the period of performance from May 13, 2000 through June 30, 2004; (c) Wage Determination no. 1994-2302, Rev 15, date of last revision 12/09/2002 (attached); (d) Wage Determination no. 1994-2104, Rev 20, date of last revision 10/04/2002 (attached); and (e) incremental contract funding of $437,070.00.

3. SECTION B.1 SCOPE OF WORK, Paragraph (a), is hereby revised as follows:

Period	ST Hours	O/T Hours	Total Hours
07/01/00-06/30/01	[redacted]		
07/01/01-06/30/02			
07/01/02-06/30/03			
07/01/03-06/30/04			
07/01/04-06/30/05			

4. SECTION B.3 ESTIMATED AND ALLOWABLE COSTS—INCREMENTALLY FUNDED CONTRACT, Paragraphs (1), (2), and (3) are hereby revised as follows:

(a) Estimated Costs, Fee, and Sum Allotted

(1) Estimated cost, base fee, and potential award fee by contract period.

Period	Estimated Cost	Potential Award Fee
07/01/00-06/30/01	$7,863,162	$342,588
07/01/01-06/30/02	$9,533,390	$411,497
07/01/02-06/30/03	$10,648,690	$445,821
07/01/03-06/30/04	$9,664,298	$435,208
07/01/04-06/30/05	$9,645,902	$432,452

(2) Total contract value is computed as follows:

[redacted]	
Fixed Price Work	463,204.25
Total Contract Value	$37,709,540.25

(3) Total funds currently available for payment and allotted to this contract, in accordance with FAR clause 52.232-22, "Limitation of Funds," plus the estimated contract period covered by this amount:

Total Sum Allotted	$26,877,812.96
[redacted]	
Potential Award Fee	$ 1,645,727.00
Estimated Period of Performance	07/01/2000 - 07/11/2003

5. SECTION F.2 PERIOD OF PERFORMANCE, is hereby revised as follows:

The period of performance of this contract is from the May 15, 2000 through June 30, 2004.

6. SECTION J.1 LIST OF ATTACHMENTS-STATEMENT OF WORK/SPECIFICATIONS THAT ARE HEREBY MADE A PART OF THIS SOLICITATION AND ANY RESULTANT CONTRACT

The list of attachments is hereby changed as follows:

Exhibit A - Statement of Work
Exhibit B - Wage Board Determination (WBD)1994-2302, Rev. 15, Dated 12/09/2002
Exhibit C - Performance Evaluation Plan for Evaluating the National Data Buoy Center Technical Services Contractor (NTSC), Dated 11/14/2002
Exhibit D - Contractor's Small, Small Disadvantaged and Women-Owned Business Subcontracting Plan, signed 12/15/00.
Exhibit E - Statement of Work for NDBC Sterling Test Facilities
Exhibit F - Wage Board Determination (WBD) 94-2104, Rev 20, dated 10/04/2002

MOD	SUP	ACC/APP	AMOUNT	CUMULATIVE OBLIGATION	DATE
0094	S-95	1403A8M1JDBPAB230401020012006000095030000 25130000	$ 378,000.00		
		1403A8M1JDBPAB230401020012006000095030000 26190000	$ 119,000.00		
		1403A8M1JMWPGC230401020002006000095030000 26190000	$ 55,825.00		
		14034BM1JSMPR606040102000200600095030000 25130000	$ 5,482.76		
		14034BM1JSMPR606040102000200600095030000 26190000	$ 1,824.31		
			$ 560,132.07	$26,440,742.96	05/22/03
0095	S-96	1403A8M1JMWPA223040102000200600095030000 25130000	$ 437,070.00		
			$ 437,070.00	$26,877,812.96	05/31/03

T-727 P.002/012 F-693
8184267530 From-DEPT OF COMMERCE-ACQUISITIONS
May-20-2003 14:58

94-2302 MS.PASCAGOULA 12/17/02
FOR OFFICIAL USE ONLY BY FEDERAL AGENCIES PARTICIPATING IN MOU WITH DOL

William W.Gross
Director

Division of
Wage Determinations
WASHINGTON D.C. 20210

Wage Determination No.: 1994-2302
Revision No.: 15
Date Of Last Revision: 12/09/2002

State: Mississippi

Area: Mississippi Counties of George, George, Hancock, Hancock, Harrison, Harrison, Jackson, Jackson, Pearl River, Pearl River, Stone, Stone

Fringe Benefits Required Follow the Occupational Listing

OCCUPATION TITLE	MINIMUM WAGE RATE
Administrative Support and Clerical Occupations	
Accounting Clerk I	9.05
Accounting Clerk II	11.36
Accounting Clerk III	13.71
Accounting Clerk IV	16.77
Court Reporter	12.10
Dispatcher, Motor Vehicle	11.20
Document Preparation Clerk	9.26
Duplicating Machine Operator	9.26
Film/Tape Librarian	8.80
General Clerk I	7.45
General Clerk II	8.36
General Clerk III	9.19
General Clerk IV	13.67
Housing Referral Assistant	14.75
Key Entry Operator I	8.93
Key Entry Operator II	10.28
Messenger (Courier)	7.58
Order Clerk I	10.99
Order Clerk II	14.67
Personnel Assistant (Employment) I	11.14
Personnel Assistant (Employment) II	12.53
Personnel Assistant (Employment) III	13.40
Personnel Assistant (Employment) IV	15.04
Production Control Clerk	14.73
Rental Clerk	9.29
Scheduler, Maintenance	10.47

Secretary I	10.47
Secretary II	13.10
Secretary III	14.75
Secretary IV	16.05
Secretary V	17.78
Service Order Dispatcher	8.96
Stenographer I	8.18
Stenographer II	9.30
Supply Technician	16.05
Survey Worker (Interviewer)	11.00
Switchboard Operator-Receptionist	8.44
Test Examiner	13.10
Test Proctor	13.10
Travel Clerk I	8.51
Travel Clerk II	9.02
Travel Clerk III	9.43
Word Processor I	10.19
Word Processor II	11.45
Word Processor III	12.79
Automatic Data Processing Occupations	
Computer Data Librarian	8.35
Computer Operator I	10.14
Computer Operator II	12.44
Computer Operator III	14.52
Computer Operator IV	15.45
Computer Operator V	17.06
Computer Programmer I (1)	16.16
Computer Programmer II (1)	19.97
Computer Programmer III (1)	24.00
Computer Programmer IV (1)	27.61
Computer Systems Analyst I (1)	23.05
Computer Systems Analyst II (1)	25.26
Computer Systems Analyst III (1)	27.62
Peripheral Equipment Operator	11.81
Automotive Service Occupations	
Automotive Body Repairer, Fiberglass	15.42
Automotive Glass Installer	13.96
Automotive Worker	13.96
Electrician, Automotive	14.52
Mobile Equipment Servicer	12.79
Motor Equipment Metal Mechanic	15.09
Motor Equipment Metal Worker	13.96
Motor Vehicle Mechanic	16.10
Motor Vehicle Mechanic Helper	12.26
Motor Vehicle Upholstery Worker	13.38
Motor Vehicle Wrecker	13.96
Painter, Automotive	14.52
Radiator Repair Specialist	13.96

May-20-2003 14:58 From-DEPT OF COMMERCE-ACQUISITIONS 8164267530 T-727 P.004/012 F-693

Tire Repairer	12.36
Transmission Repair Specialist	15.09
Food Preparation and Service Occupations	
Baker	11.09
Cook I	10.17
Cook II	11.09
Dishwasher	8.41
Food Service Worker	8.41
Meat Cutter	11.09
Waiter/Waitress	8.83
Furniture Maintenance and Repair Occupations	
Electrostatic Spray Painter	15.00
Furniture Handler	11.53
Furniture Refinisher	14.52
Furniture Refinisher Helper	12.26
Furniture Repairer, Minor	13.38
Upholsterer	14.52
General Services and Support Occupations	
Cleaner, Vehicles	8.41
Elevator Operator	8.41
Gardener	10.17
House Keeping Aid I	8.41
House Keeping Aid II	8.86
Janitor	8.86
Laborer, Grounds Maintenance	8.83
Maid or Houseman	7.94
Pest Controller	12.17
Refuse Collector	9.67
Tractor Operator	10.28
Window Cleaner	8.83
Health Occupations	
Dental Assistant	11.15
Emergency Medical Technician (EMT)/Paramedic/Ambulance Driver	11.48
Licensed Practical Nurse I	9.99
Licensed Practical Nurse II	11.22
Licensed Practical Nurse III	12.54
Medical Assistant	10.38
Medical Laboratory Technician	13.47
Medical Record Clerk	11.36
Medical Record Technician	12.93
Nursing Assistant I	8.10
Nursing Assistant II	8.30
Nursing Assistant III	10.17
Nursing Assistant IV	11.43
Pharmacy Technician	11.63
Phlebotomist	12.23
Registered Nurse I	16.36
Registered Nurse II	20.00

May-20-2003 14:58 From-DEPT OF COMMERCE-ACQUISITIONS 8164287530 T-727 P.005/012 F-683

Registered Nurse II, Specialist	20.00
Registered Nurse III	21.21
Registered Nurse III, Anesthetist	24.21
Registered Nurse IV	29.01
Information and Arts Occupations	
Audiovisual Librarian	19.32
Exhibits Specialist I	16.53
Exhibits Specialist II	20.10
Exhibits Specialist III	25.61
Illustrator I	16.46
Illustrator II	20.10
Illustrator III	25.61
Librarian	17.46
Library Technician	11.00
Photographer I	11.36
Photographer II	13.07
Photographer III	15.89
Photographer IV	20.24
Photographer V	22.31
Laundry, Dry Cleaning, Pressing and Related Occupations	
Assembler	6.84
Counter Attendant	6.84
Dry Cleaner	7.55
Finisher, Flatwork, Machine	6.84
Presser, Hand	6.84
Presser, Machine, Drycleaning	6.84
Presser, Machine, Shirts	6.84
Presser, Machine, Wearing Apparel, Laundry	6.84
Sewing Machine Operator	8.72
Tailor	8.52
Washer, Machine	7.15
Machine Tool Operation and Repair Occupations	
Machine-Tool Operator (Toolroom)	14.52
Tool and Die Maker	16.72
Material Handling and Packing Occupations	
Forklift Operator	12.18
Fuel Distribution System Operator	13.24
Material Coordinator	13.69
Material Expediter	13.69
Material Handling Laborer	9.68
Order Filler	10.73
Production Line Worker (Food Processing)	12.42
Shipping Packer	11.95
Shipping/Receiving Clerk	11.09
Stock Clerk (Shelf Stocker; Store Worker II)	12.71
Store Worker I	10.90
Tools and Parts Attendant	12.58
Warehouse Specialist	12.58

May-20-2003 14:58 From-DEPT OF COMMERCE-ACQUISITIONS 8164267530 T-727 P.006/012 F-693

Mechanics and Maintenance and Repair Occupations	
Aircraft Mechanic	17.91
Aircraft Mechanic Helper	14.55
Aircraft Quality Control Inspector	18.53
Aircraft Servicer	15.88
Aircraft Worker	16.57
Appliance Mechanic	14.52
Bicycle Repairer	12.36
Cable Splicer	17.14
Carpenter, Maintenance	14.52
Carpet Layer	14.15
Electrician, Maintenance	18.11
Electronics Technician, Maintenance I	14.15
Electronics Technician, Maintenance II	16.43
Electronics Technician, Maintenance III	17.85
Fabric Worker	13.65
Fire Alarm System Mechanic	15.16
Fire Extinguisher Repairer	13.13
Fuel Distribution System Mechanic	15.59
General Maintenance Worker	13.96
Heating, Refrigeration and Air Conditioning Mechanic	15.09
Heavy Equipment Mechanic	15.26
Heavy Equipment Operator	15.09
Instrument Mechanic	17.35
Laborer	10.21
Locksmith	14.52
Machinery Maintenance Mechanic	16.43
Machinist, Maintenance	15.16
Maintenance Trades Helper	12.58
Millwright	17.54
Office Appliance Repairer	14.66
Painter, Aircraft	14.66
Painter, Maintenance	14.52
Pipefitter, Maintenance	16.28
Plumber, Maintenance	15.34
Pneudraulic Systems Mechanic	15.16
Rigger	16.50
Scale Mechanic	14.15
Sheet-Metal Worker, Maintenance	15.20
Small Engine Mechanic	13.96
Telecommunication Mechanic I	17.89
Telecommunication Mechanic II	20.65
Telephone Lineman	17.93
Welder, Combination, Maintenance	16.05
Well Driller	15.16
Woodcraft Worker	15.16
Woodworker	12.87
Miscellaneous Occupations	

May-20-2003 14:58 From-DEPT OF COMMERCE-ACQUISITIONS 8164267530 T-727 P.007/012 F-693

Animal Caretaker	9.26
Carnival Equipment Operator	9.75
Carnival Equipment Repairer	11.17
Carnival Worker	8.41
Cashier	7.31
Desk Clerk	8.14
Embalmer	16.57
Lifeguard	9.42
Mortician	17.93
Park Attendant (Aide)	11.84
Photofinishing Worker (Photo Lab Tech., Darkroom Tech)	8.50
Recreation Specialist	12.18
Recycling Worker	11.26
Sales Clerk	8.50
School Crossing Guard (Crosswalk Attendant)	9.68
Sport Official	8.50
Survey Party Chief (Chief of Party)	10.58
Surveying Aide	7.01
Surveying Technician (Instr. Person/Surveyor Asst./Instr.)	9.61
Swimming Pool Operator	11.55
Vending Machine Attendant	11.68
Vending Machine Repairer	13.28
Vending Machine Repairer Helper	11.68
Personal Needs Occupations	
Child Care Attendant	7.52
Child Care Center Clerk	9.95
Chore Aid	7.94
Homemaker	11.08
Plant and System Operation Occupations	
Boiler Tender	17.14
Sewage Plant Operator	14.66
Stationary Engineer	17.14
Ventilation Equipment Tender	12.58
Water Treatment Plant Operator	14.52
Protective Service Occupations	
Alarm Monitor	12.35
Corrections Officer	11.87
Court Security Officer	12.33
Detention Officer	12.21
Firefighter	12.89
Guard I	8.78
Guard II	13.94
Police Officer	14.75
Stevedoring/Longshoremen Occupations	
Blocker and Bracer	16.99
Hatch Tender	14.77
Line Handler	14.77
Stevedore I	16.28

May-20-2003 14:58 From-DEPT OF COMMERCE-ACQUISITIONS 8164267530 T-727 P.008/012 F-683

Stevedore II	17.65
Technical Occupations	
Air Traffic Control Specialist, Center (2)	28.21
Air Traffic Control Specialist, Station (2)	19.46
Air Traffic Control Specialist, Terminal (2)	21.43
Archeological Technician I	15.11
Archeological Technician II	16.94
Archeological Technician III	20.94
Cartographic Technician	20.37
Civil Engineering Technician	14.65
Computer Based Training (CBT) Specialist/ Instructor	23.46
Drafter I	14.64
Drafter II	15.72
Drafter III	19.12
Drafter IV	24.35
Engineering Technician I	13.38
Engineering Technician II	15.52
Engineering Technician III	17.85
Engineering Technician IV	21.73
Engineering Technician V	27.67
Engineering Technician VI	30.49
Environmental Technician	18.22
Flight Simulator/Instructor (Pilot)	22.34
Graphic Artist	19.07
Instructor	19.65
Laboratory Technician	14.93
Mathematical Technician	16.76
Paralegal/Legal Assistant I	13.92
Paralegal/Legal Assistant II	17.06
Paralegal/Legal Assistant III	20.88
Paralegal/Legal Assistant IV	25.25
Photooptics Technician	16.56
Technical Writer	22.80
Unexploded (UXO) Safety Escort	17.93
Unexploded (UXO) Sweep Personnel	17.93
Unexploded Ordnance (UXO) Technician I	17.93
Unexploded Ordnance (UXO) Technician II	21.70
Unexploded Ordnance (UXO) Technician III	26.01
Weather Observer, Combined Upper Air and Surface Programs (3)	17.17
Weather Observer, Senior (3)	19.04
Weather Observer, Upper Air (3)	17.17
Transportation/ Mobile Equipment Operation Occupations	
Bus Driver	12.64
Parking and Lot Attendant	7.06
Shuttle Bus Driver	10.91
Taxi Driver	8.37
Truckdriver, Heavy Truck	13.59
Truckdriver, Light Truck	10.10

May-20-2003 14:58 From-DEPT OF COMMERCE-ACQUISITIONS 8164287530 T-727 P.008/012 F-683

Truckdriver, Medium Truck	15.01
Truckdriver, Tractor-Trailer	13.59

ALL OCCUPATIONS LISTED ABOVE RECEIVE THE FOLLOWING BENEFITS:

HEALTH & WELFARE: Life, accident, and health insurance plans, sick leave, pension plans, civic and personal leave, severance pay, and savings and thrift plans. Minimum employer contributions costing an average of $2.56 per hour computed on the basis of all hours worked by service employees employed on the contract.

VACATION: 1 week paid vacation after 1 year of service with a contractor or successor; 2 weeks after 2 years; 3 weeks after 5 years; and 4 weeks after 15 years. Length of service includes the whole span of continuous service with the present contractor or successor, wherever employed, and with the predecessor contractor in the performance of similar work at the same Federal facility. (Reg. 29 CFR 4.173)

HOLIDAYS: A minimum of ten paid holidays per year: New Year's Day, Martin Luther King Jr.'s Birthday, Washington's Birthday, Memorial Day, Independence Day, Labor Day, Columbus Day, Veterans' Day, Thanksgiving Day, and Christmas Day. (A contractor may substitute for any of the named holidays another day off with pay in accordance with a plan communicated to the employees involved.) (See 29 CFR 4.174)

THE OCCUPATIONS WHICH HAVE PARENTHESES AFTER THEM RECEIVE THE FOLLOWING BENEFITS (as numbered):

1) Does not apply to employees employed in a bona fide executive, administrative, or professional capacity as defined and delineated in 29 CFR 541. (See CFR 4.156)

2) APPLICABLE TO AIR TRAFFIC CONTROLLERS ONLY - NIGHT DIFFERENTIAL: An employee is entitled to pay for all work performed between the hours of 6:00 P.M. and 6:00 A.M. at the rate of basic pay plus a night pay differential amounting to 10 percent of the rate of basic pay.

3) WEATHER OBSERVERS - NIGHT PAY & SUNDAY PAY: If you work at night as part of a regular tour of duty, you will earn a night differential and receive an additional 10% of basic pay for any hours worked between 6pm and 6am. If you are a full-time employed (40 hours a week) and Sunday is part of your regularly scheduled workweek, you are paid at your rate of basic pay plus a Sunday premium of 25% of your basic rate for each hour of Sunday work which is not overtime (i.e. occasional work on Sunday outside the normal tour of duty is considered overtime work).

HAZARDOUS PAY DIFFERENTIAL: An 8 percent differential is applicable to employees employed in a position that represents a high degree of hazard when working with or in close proximity to ordinance, explosives, and incendiary materials. This includes work such as screening, blending, dying, mixing, and pressing of sensitive ordance, explosives, and pyrotechnic compositions such as lead azide, black powder and photoflash powder. All dry-

May-20-2003 14:59 From-DEPT OF COMMERCE-ACQUISITIONS 8184267530 T-727 P.010/012 F-693

house activities involving propellants or explosives. Demilitarization, modification, renovation, demolition, and maintenance operations on sensitive ordnance, explosives and incendiary materials. All operations involving regrading and cleaning of artillery ranges.

A 4 percent differential is applicable to employees employed in a position that represents a low degree of hazard when working with, or in close proximity to ordance, (or employees possibly adjacent to) explosives and incendiary materials which involves potential injury such as laceration of hands, face, or arms of the employee engaged in the operation, irritation of the skin, minor burns and the like; minimal damage to immediate or adjacent work area or equipment being used. All operations involving, unloading, storage, and hauling of ordance, explosive, and incendiary ordnance material other than small arms ammunition. These differentials are only applicable to work that has been specifically designated by the agency for ordance, explosives, and incendiary material differential pay.

** UNIFORM ALLOWANCE **

If employees are required to wear uniforms in the performance of this contract (either by the terms of the Government contract, by the employer, by the state or local law, etc.), the cost of furnishing such uniforms and maintaining (by laundering or dry cleaning) such uniforms is an expense that may not be borne by an employee where such cost reduces the hourly rate below that required by the wage determination. The Department of Labor will accept payment in accordance with the following standards as compliance:

The contractor or subcontractor is required to furnish all employees with an adequate number of uniforms without cost or to reimburse employees for the actual cost of the uniforms. In addition, where uniform cleaning and maintenance is made the responsibility of the employee, all contractors and subcontractors subject to this wage determination shall (in the absence of a bona fide collective bargaining agreement providing for a different amount, or the furnishing of contrary affirmative proof as to the actual cost), reimburse all employees for such cleaning and maintenance at a rate of $3.35 per week (or $.67 cents per day). However, in those instances where the uniforms furnished are made of "wash and wear" materials, may be routinely washed and dried with other personal garments, and do not require any special treatment such as dry cleaning, daily washing, or commercial laundering in order to meet the cleanliness or appearance standards set by the terms of the Government contract, by the contractor, by law, or by the nature of the work, there is no requirement that employees be reimbursed for uniform maintenance costs.

** NOTES APPLYING TO THIS WAGE DETERMINATION **

Source of Occupational Title and Descriptions:

The duties of employees under job titles listed are those described in the "Service Contract Act Directory of Occupations," Fourth Edition, January 1993, as amended by the Third Supplement, dated March 1997, unless otherwise indicated. This publication may be obtained from the Superintendent of Documents, at 202-783-3238, or by writing to the Superintendent of Documents, U.S. Government Printing Office, Washington, D.C. 20402. Copies of specific job descriptions may also be obtained from the appropriate contracting officer.

May-20-2003 14:58 From-DEPT OF COMMERCE-ACQUISITIONS 8164267530 T-727 P.011/012 F-683

REQUEST FOR AUTHORIZATION OF ADDITIONAL CLASSIFICATION AND WAGE RATE (Standard Form 1444 (SF 1444))

Conformance Process:

The contracting officer shall require that any class of service employee which is not listed herein and which is to be employed under the contract (i.e., the work to be performed is not performed by any classification listed in the wage determination), be classified by the contractor so as to provide a reasonable relationship (i.e., appropriate level of skill comparison) between such unlisted classifications and the classifications listed in the wage determination. Such conformed classes of employees shall be paid the monetary wages and furnished the fringe benefits as are determined. Such conforming process shall be initiated by the contractor prior to the performance of contract work by such unlisted class(es) of employees. The conformed classification, wage rate, and/or fringe benefits shall be retroactive to the commencement date of the contract. (See Section 4.6 (C)(vi)) When multiple wage determinations are included in a contract, a separate SF 1444 should be prepared for each wage determination to which a class(es) is to be conformed.

The process for preparing a conformance request is as follows:

1) When preparing the bid, the contractor identifies the need for a conformed occupation) and computes a proposed rate).

2) After contract award, the contractor prepares a written report listing in order proposed classification title), a Federal grade equivalency (FGE) for each proposed classification), job description), and rationale for proposed wage rate), including information regarding the agreement or disagreement of the authorized representative of the employees involved, or where there is no authorized representative, the employees themselves. This report should be submitted to the contracting officer no later than 30 days after such unlisted class(es) of employees performs any contract work.

3) The contracting officer reviews the proposed action and promptly submits a report of the action, together with the agency's recommendations and pertinent information including the position of the contractor and the employees, to the Wage and Hour Division, Employment Standards Administration, U.S. Department of Labor, for review. (See section 4.6(b)(2) of Regulations 29 CFR Part 4).

4) Within 30 days of receipt, the Wage and Hour Division approves, modifies, or disapproves the action via transmittal to the agency contracting officer, or notifies the contracting officer that additional time will be required to process the request.

5) The contracting officer transmits the Wage and Hour decision to the contractor.

6) The contractor informs the affected employees.

Information required by the Regulations must be submitted on SF 1444 or bond paper.

When preparing a conformance request, the "Service Contract Act Directory of Occupations" (the Directory) should be used to compare job definitions to insure that duties requested are not performed by a classification already listed in the wage determination. Remember, it is not the job title, but the required tasks that determine whether a class is included in an established wage determination. Conformances may not be used to artificially split, combine, or subdivide classifications listed in the wage determination.

F-016 P.002 T-863 8164267530 From-DEPT OF COMMERCE-ACQUISITIONS Jun-04-2003 11:23

94-2104 DC,DISTRICT-WIDE 10/15/02
FOR OFFICIAL USE ONLY BY FEDERAL AGENCIES PARTICIPATING IN MOU WITH DOL

William W.Gross
Director

Division of
Wage Determinations

WASHINGTON D.C. 20210

Wage Determination No.: 1994-2104
Revision No.: 20
Date Of Last Revision: 10/04/2002

States: District of Columbia, Maryland, Virginia

Area: District of Columbia Statewide
Maryland Counties of Calvert, Charles, Frederick, Montgomery, Prince George's, St Mary's
Virginia Counties of Alexandria, Arlington, Fairfax, Falls Church, Fauquier, King George, Loudoun, Prince William, Stafford

Fringe Benefits Required Follow the Occupational Listing

OCCUPATION TITLE	MINIMUM WAGE RATE
Administrative Support and Clerical Occupations	
Accounting Clerk I	10.16
Accounting Clerk II	11.88
Accounting Clerk III	14.04
Accounting Clerk IV	16.37
Court Reporter	14.94
Dispatcher, Motor Vehicle	14.63
Document Preparation Clerk	11.29
Duplicating Machine Operator	11.29
Film/Tape Librarian	14.65
General Clerk I	11.68
General Clerk II	13.72
General Clerk III	15.32
General Clerk IV	18.74
Housing Referral Assistant	17.82
Key Entry Operator I	10.40
Key Entry Operator II	11.62
Messenger (Courier)	9.30
Order Clerk I	14.74
Order Clerk II	16.29
Personnel Assistant (Employment) I	13.05
Personnel Assistant (Employment) II	14.24
Personnel Assistant (Employment) III	16.42
Personnel Assistant (Employment) IV	19.60
Production Control Clerk	17.28

Jun-04-2003 11:23 From-DEPT OF COMMERCE-ACQUISITIONS T-863 P.003 F-016 8164267530

Rental Clerk	15.42
Scheduler, Maintenance	14.06
Secretary I	14.71
Secretary II	15.35
Secretary III	18.49
Secretary IV	19.57
Secretary V	22.79
Service Order Dispatcher	14.04
Stenographer I	14.68
Stenographer II	16.47
Supply Technician	19.57
Survey Worker (Interviewer)	14.94
Switchboard Operator-Receptionist	10.96
Test Examiner	15.35
Test Proctor	15.35
Travel Clerk I	11.63
Travel Clerk II	12.49
Travel Clerk III	13.41
Word Processor I	11.80
Word Processor II	14.22
Word Processor III	16.65
Automatic Data Processing Occupations	
Computer Data Librarian	11.69
Computer Operator I	13.30
Computer Operator II	15.67
Computer Operator III	18.60
Computer Operator IV	18.94
Computer Operator V	22.94
Computer Programmer I (1)	19.64
Computer Programmer II (1)	23.05
Computer Programmer III (1)	26.99
Computer Programmer IV (1)	27.62
Computer Systems Analyst I (1)	26.99
Computer Systems Analyst II (1)	27.62
Computer Systems Analyst III (1)	27.62
Peripheral Equipment Operator	14.06
Automotive Service Occupations	
Automotive Body Repairer, Fiberglass	21.38
Automotive Glass Installer	17.03
Automotive Worker	17.03
Electrician, Automotive	18.05
Mobile Equipment Servicer	14.94
Motor Equipment Metal Mechanic	19.03
Motor Equipment Metal Worker	17.03
Motor Vehicle Mechanic	19.11
Motor Vehicle Mechanic Helper	16.01
Motor Vehicle Upholstery Worker	17.03
Motor Vehicle Wrecker	17.03

F-016 T-863 P.004 8164267530 From-DEPT OF COMMERCE-ACQUISITIONS Jun-04-2003 11:23

Painter, Automotive	18.05
Radiator Repair Specialist	17.03
Tire Repairer	14.43
Transmission Repair Specialist	19.03
Food Preparation and Service Occupations	
Baker	11.87
Cook I	10.41
Cook II	11.87
Dishwasher	8.76
Food Service Worker	9.01
Meat Cutter	16.07
Waiter/Waitress	8.17
Furniture Maintenance and Repair Occupations	
Electrostatic Spray Painter	18.05
Furniture Handler	12.55
Furniture Refinisher	18.05
Furniture Refinisher Helper	13.85
Furniture Repairer, Minor	16.01
Upholsterer	18.05
General Services and Support Occupations	
Cleaner, Vehicles	9.67
Elevator Operator	9.79
Gardener	12.98
House Keeping Aid I	9.02
House Keeping Aid II	9.28
Janitor	9.64
Laborer, Grounds Maintenance	10.75
Maid or Houseman	9.28
Pest Controller	11.85
Refuse Collector	10.88
Tractor Operator	12.73
Window Cleaner	10.51
Health Occupations	
Dental Assistant	14.36
Emergency Medical Technician (EMT)/Paramedic/Ambulance Driver	11.95
Licensed Practical Nurse I	14.43
Licensed Practical Nurse II	16.20
Licensed Practical Nurse III	18.13
Medical Assistant	11.76
Medical Laboratory Technician	13.93
Medical Record Clerk	13.57
Medical Record Technician	14.21
Nursing Assistant I	8.46
Nursing Assistant II	9.52
Nursing Assistant III	11.94
Nursing Assistant IV	13.40
Pharmacy Technician	11.84
Phlebotomist	11.21

Jun-04-2003 11:23 From-DEPT OF COMMERCE-ACQUISITIONS T-663 P.005 F-016 8164267530

Registered Nurse I	22.54
Registered Nurse II	25.08
Registered Nurse II, Specialist	25.08
Registered Nurse III	32.38
Registered Nurse III, Anesthetist	32.38
Registered Nurse IV	38.81
Information and Arts Occupations	
Audiovisual Librarian	18.95
Exhibits Specialist I	19.79
Exhibits Specialist II	20.99
Exhibits Specialist III	25.84
Illustrator I	17.03
Illustrator II	21.29
Illustrator III	26.20
Librarian	22.33
Library Technician	15.03
Photographer I	13.93
Photographer II	15.64
Photographer III	19.56
Photographer IV	24.08
Photographer V	26.50
Laundry, Dry Cleaning, Pressing and Related Occupations	
Assembler	8.71
Counter Attendant	8.71
Dry Cleaner	9.83
Finisher, Flatwork, Machine	8.71
Presser, Hand	8.71
Presser, Machine, Drycleaning	8.71
Presser, Machine, Shirts	8.71
Presser, Machine, Wearing Apparel, Laundry	8.71
Sewing Machine Operator	10.63
Tailor	12.43
Washer, Machine	9.31
Machine Tool Operation and Repair Occupations	
Machine-Tool Operator (Toolroom)	18.05
Tool and Die Maker	21.95
Material Handling and Packing Occupations	
Forklift Operator	14.58
Fuel Distribution System Operator	19.38
Material Coordinator	16.97
Material Expediter	16.97
Material Handling Laborer	11.50
Order Filler	13.21
Production Line Worker (Food Processing)	12.80
Shipping Packer	12.21
Shipping/Receiving Clerk	13.09
Stock Clerk (Shelf Stocker; Store Worker II)	12.69
Store Worker I	8.89

Jun-04-2003 11:23 From-DEPT OF COMMERCE-ACQUISITIONS 8164267530 T-863 P.006 F-016

Tools and Parts Attendant	16.99
Warehouse Specialist	15.01
Mechanics and Maintenance and Repair Occupations	
Aircraft Mechanic	21.95
Aircraft Mechanic Helper	14.51
Aircraft Quality Control Inspector	23.11
Aircraft Servicer	16.78
Aircraft Worker	17.84
Appliance Mechanic	18.05
Bicycle Repairer	14.43
Cable Splicer	20.93
Carpenter, Maintenance	18.05
Carpet Layer	17.61
Electrician, Maintenance	22.59
Electronics Technician, Maintenance I	16.08
Electronics Technician, Maintenance II	20.88
Electronics Technician, Maintenance III	22.73
Fabric Worker	15.76
Fire Alarm System Mechanic	19.03
Fire Extinguisher Repairer	14.94
Fuel Distribution System Mechanic	20.93
General Maintenance Worker	16.46
Heating, Refrigeration and Air Conditioning Mechanic	19.03
Heavy Equipment Mechanic	19.03
Heavy Equipment Operator	19.31
Instrument Mechanic	19.03
Laborer	10.70
Locksmith	18.05
Machinery Maintenance Mechanic	20.51
Machinist, Maintenance	21.52
Maintenance Trades Helper	13.85
Millwright	19.24
Office Appliance Repairer	18.05
Painter, Aircraft	20.76
Painter, Maintenance	18.05
Pipefitter, Maintenance	19.04
Plumber, Maintenance	18.05
Pneudraulic Systems Mechanic	19.03
Rigger	19.03
Scale Mechanic	17.03
Sheet-Metal Worker, Maintenance	19.03
Small Engine Mechanic	20.05
Telecommunication Mechanic I	19.41
Telecommunication Mechanic II	20.45
Telephone Lineman	20.93
Welder, Combination, Maintenance	19.03
Well Driller	19.03
Woodcraft Worker	19.03

Jun-04-2003 11:24 From-DEPT OF COMMERCE-ACQUISITIONS 8164267530 T-863 P.007 F-016

Woodworker	15.32
Miscellaneous Occupations	
Animal Caretaker	8.97
Carnival Equipment Operator	11.11
Carnival Equipment Repairer	11.97
Carnival Worker	7.48
Cashier	8.53
Desk Clerk	9.78
Embalmer	13.04
Lifeguard	9.67
Mortician	21.63
Park Attendant (Aide)	12.15
Photofinishing Worker (Photo Lab Tech., Darkroom Tech)	9.03
Recreation Specialist	15.94
Recycling Worker	14.06
Sales Clerk	10.04
School Crossing Guard (Crosswalk Attendant)	10.34
Sport Official	11.24
Survey Party Chief (Chief of Party)	14.92
Surveying Aide	9.27
Surveying Technician (Instr. Person/Surveyor Asst./Instr.)	14.18
Swimming Pool Operator	13.21
Vending Machine Attendant	10.20
Vending Machine Repairer	13.24
Vending Machine Repairer Helper	10.77
Personal Needs Occupations	
Child Care Attendant	11.37
Child Care Center Clerk	15.86
Chore Aid	8.05
Homemaker	16.45
Plant and System Operation Occupations	
Boiler Tender	20.85
Sewage Plant Operator	19.15
Stationary Engineer	20.85
Ventilation Equipment Tender	13.85
Water Treatment Plant Operator	19.72
Protective Service Occupations	
Alarm Monitor	15.04
Corrections Officer	17.69
Court Security Officer	18.84
Detention Officer	18.29
Firefighter	19.72
Guard I	9.51
Guard II	12.53
Police Officer	20.54
Stevedoring/Longshoremen Occupations	
Blocker and Bracer	16.46
Hatch Tender	15.74

Jun-04-2003 11:24 From-DEPT OF COMMERCE-ACQUISITIONS 8164267530 T-863 P.008 F-016

Line Handler	15.74
Stevedore I	15.47
Stevedore II	17.45
Technical Occupations	
Air Traffic Control Specialist, Center (2)	28.96
Air Traffic Control Specialist, Station (2)	19.97
Air Traffic Control Specialist, Terminal (2)	21.99
Archeological Technician I	14.57
Archeological Technician II	16.20
Archeological Technician III	20.20
Cartographic Technician	22.73
Civil Engineering Technician	19.56
Computer Based Training (CBT) Specialist/ Instructor	23.94
Drafter I	12.22
Drafter II	15.30
Drafter III	17.18
Drafter IV	21.49
Engineering Technician I	15.50
Engineering Technician II	17.99
Engineering Technician III	21.63
Engineering Technician IV	24.82
Engineering Technician V	30.35
Engineering Technician VI	36.72
Environmental Technician	19.29
Flight Simulator/Instructor (Pilot)	27.76
Graphic Artist	20.36
Instructor	23.34
Laboratory Technician	15.98
Mathematical Technician	23.39
Paralegal/Legal Assistant I	16.71
Paralegal/Legal Assistant II	21.31
Paralegal/Legal Assistant III	26.07
Paralegal/Legal Assistant IV	31.54
Photooptics Technician	21.06
Technical Writer	23.99
Unexploded (UXO) Safety Escort	18.40
Unexploded (UXO) Sweep Personnel	18.40
Unexploded Ordnance (UXO) Technician I	18.40
Unexploded Ordnance (UXO) Technician II	22.27
Unexploded Ordnance (UXO) Technician III	26.69
Weather Observer, Combined Upper Air and Surface Programs (3)	16.64
Weather Observer, Senior (3)	19.38
Weather Observer, Upper Air (3)	16.64
Transportation/ Mobile Equipment Operation Occupations	
Bus Driver	15.09
Parking and Lot Attendant	8.62
Shuttle Bus Driver	12.94
Taxi Driver	10.60

Jun-04-2003 11:24 From-DEPT OF COMMERCE-ACQUISITIONS 8164267530 T-863 P.009 F-016

Truckdriver, Heavy Truck	17.52
Truckdriver, Light Truck	11.78
Truckdriver, Medium Truck	14.97
Truckdriver, Tractor-Trailer	17.52

ALL OCCUPATIONS LISTED ABOVE RECEIVE THE FOLLOWING BENEFITS:

HEALTH & WELFARE: Life, accident, and health insurance plans, sick leave, pension plans, civic and personal leave, severance pay, and savings and thrift plans. Minimum employer contributions costing an average of $2.56 per hour computed on the basis of all hours worked by service employees employed on the contract.

VACATION: 2 weeks paid vacation after 1 year of service with a contractor or successor; 3 weeks after 5 years, and 4 weeks after 15 years. Length of service includes the whole span of continuous service with the present contractor or successor, wherever employed, and with the predecessor contractors in the performance of similar work at the same Federal facility. (Reg. 29 CFR 4.173)

HOLIDAYS: A minimum of ten paid holidays per year: New Year's Day, Martin Luther King Jr.'s Birthday, Washington's Birthday, Memorial Day, Independence Day, Labor Day, Columbus Day, Veterans' Day, Thanksgiving Day, and Christmas Day. (A contractor may substitute for any of the named holidays another day off with pay in accordance with a plan communicated to the employees involved.) (See 29 CFR 4.174)

THE OCCUPATIONS WHICH HAVE PARENTHESES AFTER THEM RECEIVE THE FOLLOWING BENEFITS (as numbered):

1) Does not apply to employees employed in a bona fide executive, administrative, or professional capacity as defined and delineated in 29 CFR 541. (See CFR 4.156)

2) APPLICABLE TO AIR TRAFFIC CONTROLLERS ONLY - NIGHT DIFFERENTIAL: An employee is entitled to pay for all work performed between the hours of 6:00 P.M. and 6:00 A.M. at the rate of basic pay plus a night pay differential amounting to 10 percent of the rate of basic pay.

3) WEATHER OBSERVERS - NIGHT PAY & SUNDAY PAY: If you work at night as part of a regular tour of duty, you will earn a night differential and receive an additional 10% of basic pay for any hours worked between 6pm and 6am. If you are a full-time employed (40 hours a week) and Sunday is part of your regularly scheduled workweek, you are paid at your rate of basic pay plus a Sunday premium of 25% of your basic rate for each hour of Sunday work which is not overtime (i.e. occasional work on Sunday outside the normal tour of duty is considered overtime work).

HAZARDOUS PAY DIFFERENTIAL: An 8 percent differential is applicable to employees employed in a position that represents a high degree of hazard when working with or in close proximity to ordinance, explosives, and incendiary materials. This includes work such as

Jun-04-2003 11:24 From-DEPT OF COMMERCE-ACQUISITIONS 8164267530 T-863 P.010 F-016

screening, blending, dying, mixing, and pressing of sensitive ordance, explosives, and pyrotechnic compositions such as lead azide, black powder and photoflash powder. All dry-house activities involving propellants or explosives. Demilitarization, modification, renovation, demolition, and maintenance operations on sensitive ordnance, explosives and incendiary materials. All operations involving regrading and cleaning of artillery ranges.

A 4 percent differential is applicable to employees employed in a position that represents a low degree of hazard when working with, or in close proximity to ordance, (or employees possibly adjacent to) explosives and incendiary materials which involves potential injury such as laceration of hands, face, or arms of the employee engaged in the operation, irritation of the skin, minor burns and the like; minimal damage to immediate or adjacent work area or equipment being used. All operations involving, unloading, storage, and hauling of ordance, explosive, and incendiary ordnance material other than small arms ammunition. These differentials are only applicable to work that has been specifically designated by the agency for ordance, explosives, and incendiary material differential pay.

** UNIFORM ALLOWANCE **

If employees are required to wear uniforms in the performance of this contract (either by the terms of the Government contract, by the employer, by the state or local law, etc.), the cost of furnishing such uniforms and maintaining (by laundering or dry cleaning) such uniforms is an expense that may not be borne by an employee where such cost reduces the hourly rate below that required by the wage determination. The Department of Labor will accept payment in accordance with the following standards as compliance:

The contractor or subcontractor is required to furnish all employees with an adequate number of uniforms without cost or to reimburse employees for the actual cost of the uniforms. In addition, where uniform cleaning and maintenance is made the responsibility of the employee, all contractors and subcontractors subject to this wage determination shall (in the absence of a bona fide collective bargaining agreement providing for a different amount, or the furnishing of contrary affirmative proof as to the actual cost), reimburse all employees for such cleaning and maintenance at a rate of $3.35 per week (or $.67 cents per day). However, in those instances where the uniforms furnished are made of "wash and wear" materials, may be routinely washed and dried with other personal garments, and do not require any special treatment such as dry cleaning, daily washing, or commercial laundering in order to meet the cleanliness or appearance standards set by the terms of the Government contract, by the contractor, by law, or by the nature of the work, there is no requirement that employees be reimbursed for uniform maintenance costs.

** NOTES APPLYING TO THIS WAGE DETERMINATION **

Source of Occupational Title and Descriptions:

The duties of employees under job titles listed are those described in the "Service Contract Act Directory of Occupations," Fourth Edition, January 1993, as amended by the Third Supplement, dated March 1997, unless otherwise indicated. This publication may be obtained from the Superintendent of Documents, at 202-783-3238, or by writing to the Superintendent of Documents, U.S. Government Printing Office, Washington, D.C. 20402.

Jun-04-2003 11:24 From-DEPT OF COMMERCE-ACQUISITIONS 8184267530 T-863 P.011 F-016

Copies of specific job descriptions may also be obtained from the appropriate contracting officer.

REQUEST FOR AUTHORIZATION OF ADDITIONAL CLASSIFICATION AND WAGE RATE (Standard Form 1444 (SF 1444))

Conformance Process:

The contracting officer shall require that any class of service employee which is not listed herein and which is to be employed under the contract (i.e., the work to be performed is not performed by any classification listed in the wage determination), be classified by the contractor so as to provide a reasonable relationship (i.e., appropriate level of skill comparison) between such unlisted classifications and the classifications listed in the wage determination. Such conformed classes of employees shall be paid the monetary wages and furnished the fringe benefits as are determined. Such conforming process shall be initiated by the contractor prior to the performance of contract work by such unlisted class(es) of employees. The conformed classification, wage rate, and/or fringe benefits shall be retroactive to the commencement date of the contract. (See Section 4.6 (C)(vi)) When multiple wage determinations are included in a contract, a separate SF 1444 should be prepared for each wage determination to which a class(es) is to be conformed.

The process for preparing a conformance request is as follows:

1) When preparing the bid, the contractor identifies the need for a conformed occupation) and computes a proposed rate).

2) After contract award, the contractor prepares a written report listing in order proposed classification title), a Federal grade equivalency (FGE) for each proposed classification), job description), and rationale for proposed wage rate), including ~~information regarding the agreement or disagreement of the authorized representative of the~~ employees involved, or where there is no authorized representative, the employees themselves. This report should be submitted to the contracting officer no later than 30 days after such unlisted class(es) of employees performs any contract work.

3) The contracting officer reviews the proposed action and promptly submits a report of the action, together with the agency's recommendations and pertinent information including the position of the contractor and the employees, to the Wage and Hour Division, Employment Standards Administration, U.S. Department of Labor, for review. (See section 4.6(b)(2) of Regulations 29 CFR Part 4).

4) Within 30 days of receipt, the Wage and Hour Division approves, modifies, or disapproves the action via transmittal to the agency contracting officer, or notifies the contracting officer that additional time will be required to process the request.

5) The contracting officer transmits the Wage and Hour decision to the contractor.

6) The contractor informs the affected employees.

Information required by the Regulations must be submitted on SF 1444 or bond paper.

When preparing a conformance request, the "Service Contract Act Directory of Occupations" (the Directory) should be used to compare job definitions to insure that duties requested are not performed by a classification already listed in the wage determination. Remember, it is not the job title, but the required tasks that determine whether a class is included in an established wage determination. Conformances may not be used to artificially split, combine, or subdivide classifications listed in the wage determination.