ORDER FOR SUPPLIES OR SERVICES

IMPORTANT: Mark all packages and papers with contract and/or order numbers.

1. DATE OF ORDER: 04 Aug 2009
2. CONTRACT NO. *(if any)*: QA133005CQ1035
3. ORDER NO.: 0043
4. REQUISITION/REFERENCE NO.: NWWG9502-9-ADMIN
5. ISSUING OFFICE *Address correspondence to:* WG950201
NATIONAL DATA BUOY CENTER
BUILDING 1007
STENNIS SPACE CENTER, MS 39529
KURT C.WEILBAECHER 228-688-2825

6. SHIP TO: WG950123
a. NAME OF CONSIGNEE: NATIONAL DATA BUOY CENTER — Ult Dest: WG950201
b. STREET ADDRESS: ATTN: PROPERTY OFFICER, BUILDING 3202
c. CITY: STENNIS SPACE CENTER
d. STATE: MS
e. ZIP CODE: 39529-6000
f. SHIP VIA

7. TO: 00004157 TIN: 953630868
a. NAME OF CONTRACTOR: SCIENCE APPLICATIONS — DUNS: 148095086
b. COMPANY NAME
c. STREET ADDRESS: 10260 CAMPUS POINT DRIVE, MAIL STOP G2
d. CITY: SAN DIEGO
e. STATE: CA
f. ZIP: 921211578

8. TYPE OF ORDER
[ ] a. PURCHASE
REFERENCE YOUR: Please furnish the following on the terms and conditions specified on both sides of this order and on the attached sheet, if any, including delivery as indicated.
[X] b. DELIVERY
Except for billing instructions on the reverse, this delivery order is subject to instructions contained on this side only of this form and is issued subject to the terms and conditions of the above-numbered contract.

9. ACCOUNTING AND APPROPRIATION
See Attached Schedule
BOC:
OBLIGATED AMT: $455,704.26

10. REQUISITIONING OFFICE

11. BUSINESS CLASSIFICATION *(Check appropriate box(es))*
[ ] a. Small [ ] b. Other than small [ ] c. Disadvantaged [ ] d. Women-owned [ ] e. HUBZone [ ] f. Emerging small business [ ] g. Service-disabled veteran-owned

12. F.O.B. POINT: DESTINATION

13. PLACE OF
a. INSPECTION
b. ACCEPTANCE

14. GOVERNMENT B/L NO.

15. DELIVER TO F.O.B. POINT ON OR BEFORE: 30 Jun 2010

16. DISCOUNT TERMS: 00.00% 0 Days
Net 30

17. SCHEDULE *(See reverse for Rejections)*

ITEM NO. (a)	SUPPLIES OR SERVICES (b)	QUANTITY ORDERED (c)	UNIT (d)	UNIT PRICE (e)	AMOUNT (f)	QTY ACCEPT. (g)

18. SHIPPING POINT
19. GROSS SHIPPING WEIGHT
20. INVOICE NO.

17(h) TOTAL (Cont. pages)

21. MAIL INVOICE TO:
a. NAME: NATIONAL DATA BUOY CENTER
b. STREET ADDRESS *(or P.O. Box)*: BUILDING 1007
c. CITY: STENNIS SPACE CENTER
d. STATE: MS
e. ZIP CODE: 39529

SEE BILLING INSTRUCTIONS ON REVERSE

US$ 455,704.26

17(i) GRAND TOTAL

22. UNITED STATES OF AMERICA BY *(Signature)* Kurt C Weilbaecher 8/5/09

23. NAME *(Typed)*: KURT C.WEILBAECHER 228-688-2825
(TITLE CONTRACTING/ORDERING OFFICER)

OPTIONAL FORM 347 (REV. 4/2006)
Prescribed by GSA/FAR 48 CFR 53.213(f)

ORDER FOR SUPPLIES OR SERVICES - Continuation

IMPORTANT: Mark all packages and papers with contract and/or order numbers.

DATE OF ORDER	CONTRACT NO. *(if any)*	ORDER NO.
04 Aug 2009	OA133005CO1035	0043

ITEM NO. (a)	SUPPLIES OR SERVICES (b)	QUANTITY ORDERED (c)	UNIT (d)	UNIT PRICE (e)	AMOUNT (f)	QTY ACCEPT. (g)
0101	Furnish all labor, materials, and equipment to produce 9 complete NOOSS buoys to include completed Level A package from Engineering for this build. See Attached Drawings. List of procedures required: 1. SB Equipment Well Air Test 2. SB ADCP Well Air Test 3. DART Tube Functional Verification 4. GOES HDR Tube Functional Verification 5. Weather System - Power System Functional Verification 6. Weather & Ocean Field Integration Test (for swap-outs) 7. AMPS WxO Tube Functional Procedure 8. AMPS TAO Tube Functional Procedure 9. SB Magnetic Interference Test Drawings: Complete Level A drawing package FFP (Inclusive of fee) Accounting and Appropriation Data: 14.06.42MS6B6.P00.0016.040301019.2006000095020000.31120000.000000 $ 26,337.04 14.06.42MS6B7.P00.0016.040301019.2006000095020000.31120000.000000 $ 89,521.70 14.06.42MS6B6.P00.0016.040301019.2006000095020000.31200000.000000 $ 97,465.92 14.06.42MS6B7.P00.0016.040301019.2006000095020000.31200000.000000 $ 242,379.60	1	JB	455,704.26	455,704.26	

Statement of Work for NDBC Standard Buoy Fabrication

1.0 Introduction

This Statement of Work (SOW) established the requirements for the fabrication, test, and delivery of NDBC Standard Buoy. Each buoy consists of and assembled Hull, Bridle, Tower and Electronics Compartment along with two Electronics Tubes along with all applicable hardware.

2.0 Applicable Documents

The following is a list of drawings/specifications applicable to this project. These are located in appendix A

Drawing Title	Dwg Number	Rev
2.3M Std Buoy Mechanical System Assembly (WEAH)	02.3FB1000-001	-
Upper Well Assembly	02.3F01105	-
Tube Enclosure Can	NDBC-X002	-
Tube Enclosure Gasket	NDBC-X004	-
Specification Title	**Spec Number**	**Rev**
Spec. for the Const. of Aluminum Ocean Body Structures	OE-5028	F
Welding and Repair Process	NDBC-8031	B
Inspection System Requirements	MIL-I-45208	A
2.3M Structural Load Test Procedure	SAIC-ETP-08-027	-

3.0 Scope

Each complete buoy assembly consists of one hull with tower and bridle (02.3FB1000-001), one upper well assembly (02.3F01105), two tube enclosure cans and gaskets (NDBC-X002, NDBC-X004)

The contractor shall construct, test, and deliver the quantity of buoys and buoy components specified in the contract in accordance with all applicable documents and the provisions in section 4.0. No components or assemblies are to be painted. The scope of the Contractor Tasks encompasses the following elements:

a) Preparation and submission of a Construction Sequence Plan

b) Preparation and submission of a Quality assurance Program
c) Fabrication and assembly
d) Inspection and testing as indicated by applicable drawings and specifications
e) Delivery of the completed buoys and buoy components
f) Delivery of the required documents

The contractor shall make arrangements to purchase the following pieces of the assembly with the listed subcontractors

Gilman Corporation
P.O. Box 68
Gilman, CT 06336-0068
Tel: 800-622-3626 (POC: George Greider)
Fax: 860-886-5402
DWG – 2.3M Standard Buoy Foam Hull (02.3F01102)

Sunbacker Fiberglass
17453 147th st SE Unit 1
Monroe, WA 98272
Tel: 360-794-5547 (POC: Al Lewis)
Fax: 360-794-5683
DWG – Upper Well Assembly (02.3F01105)
DWG – Tube Enclosure Can (NDBC-X004)

4.0 Contractor Tasks

The contractor shall accomplish the following tasks

4.1 Construction Plan

The contractor shall prepare a detailed Construction Sequence Plan which meets the requirements of Section 1.3 of OE-5028. The CSP shall identify weld fillers to be used per NDBC-8031, 6.10.3. The CSP shall be submitted to NDBC for review and acceptance prior to release for fabrication. NDBC will accept or reject the plan within 15 calendar days of receipt.

4.2 Quality Assurance Program

The contractor shall implement and maintain a quality assurance system in accordance with the requirements of MIL-I45208A as referenced in section 3.1 of OE-5028. The Quality Assurance Program (QAP) required to support the inspection system shall be submitted to NDBC for review and acceptance prior to release for fabrication. NDBC will accept or reject the plan within 15 calendar days of receipt.

4.3 Construction

The contractor shall construct each item specified in section 3.0 of the SOW in accordance with OE-5028, Government supplied design drawings and specifications, and the NDBC approved CSP and QAP. The contractor shall fabricate and assemble the buoys as indicated in the table above ensuring that the hull number is welded on the sterns of the buoys. All exposed edges are to be broken and de-burred. Dimensional tolerances on deck, mast, and mooring yoke components have been set to assure interchangeability of components between buoys fabricated under this and previous procurements. These tolerances are firm and must be met.

4.4 Inspection and Testing

The contractor shall inspect and test each buoy in accordance with the provisions of Section 5.0.

4.5 Delivery

Refer to Section 7.0 for the delivery schedule. Final acceptance will be at NDBC. After preliminary acceptance criteria have been met, each buoy assembly shall be sent to:

National Data Buoy Center
Attn: Property Officer
Bldg 3203
Stennis Space Center, MS 39529

Buoys should be disassembled prior to delivery (i.e. ship as separate masts and railing sections, hull with hatches and piping installed, and mooring yoke with connecting hardware). Status reports, Test Data Sheets, and other documentation shall be mailed to:

National Data Buoy Center
Attn: Contracting Officer
Bldg 1100
Stennis Space Center, MS 39529

5.0 Product Assurance

5.1 Quality Assurance

The Contractor shall implement and maintain the approved Quality Assurance Program. The contractor shall perform (or have performed) and document the inspections and tests

necessary to substantiate product conformance (including those products procured from subcontractors or vendors) to drawings, specifications, and contract requirements.

Construction and testing shall be in accordance with NDBC drawings and specifications as listed in section 2.0. Any proposed deviations from the design drawings and or specifications shall be submitted to the Contracting Officer for approval before implementation. These proposals must be accompanied by an estimate of cost and schedule impacts.

Approved deviations from the original drawings shall be documented by "red-lining" drawings to show the as-built configuration. Red-lined drawings shall be sent to the Contracting Officer upon completion of the final buoy assembly.

At a minimum the following inspections/tests shall be completed by the contractor:

a) Watertight Integrity Test of Electronics compartment and Electronics Tubes to 1.5 PSIG
b) Structural Testing of Lifting Eyes in accordance with SAIC-ETP-08-027

5.2 Acceptance Criteria

Each 6-meter buoy will be accepted by the Government only after the following:

a) Completion of all specified fabrication and assembly
b) Successful completion of watertight and structural integrity testing by contractor
c) Final Inspection and acceptance has been performed and documented by the designated Government Quality Assurance Representative

6.0 Progress Reports

Once Construction of the buoys has started, the Contractor shall prepare and deliver a monthly Progress Report to the Contracting Officer. The Progress Report shall contain the information required by section 1.4 of OE-5028

7.0 Schedule and Deliverables

The contractor shall provide a delivery schedule within 30 days of award

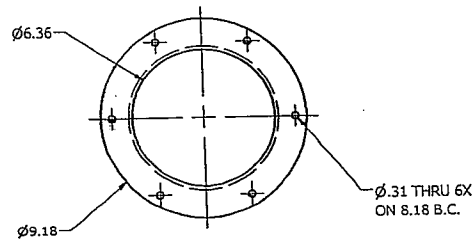

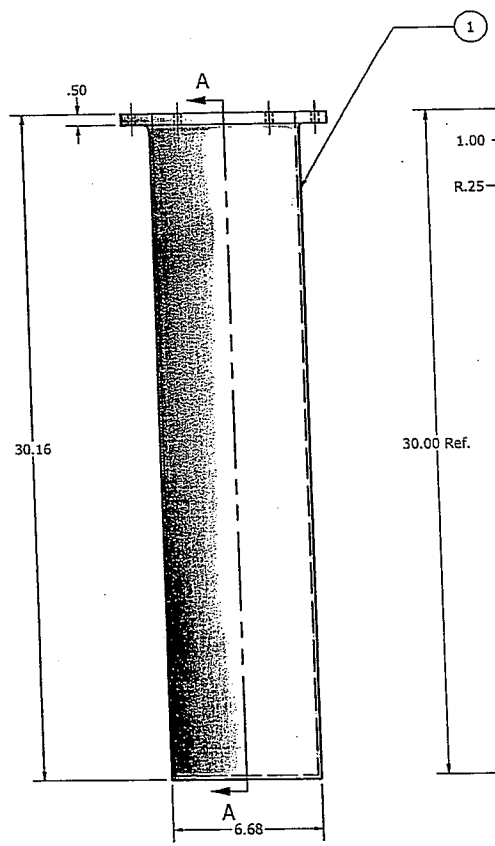

SCALE 1 / 4

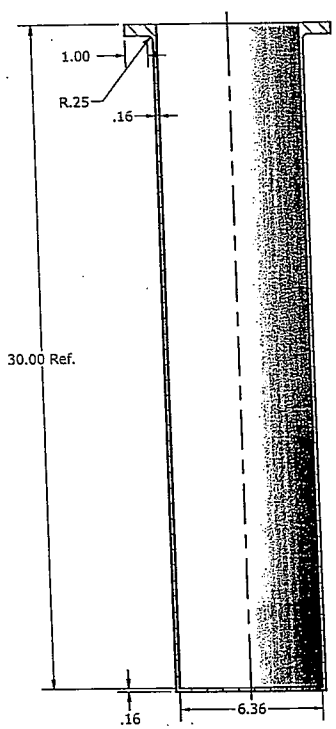

SECTION A-A

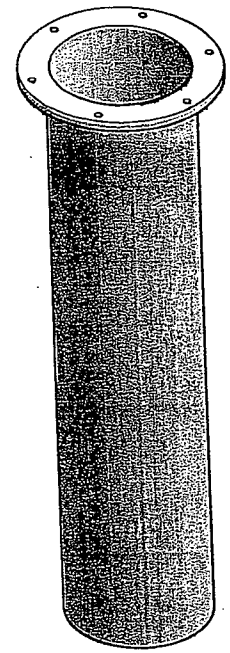

ISOMETRIC VIEW

ITEM	QTY	PART NUMBER	DESCRIPTION	MATERIAL
1	1	TBD	TUBE, 6.68 OD x 6.36 ID x 30.16L.	Fiberglass

Parts List

UNLESS OTHERWISE SPECIFIED:
DIMENSIONS ARE IN INCHES
TOLERANCES
DECIMALS .XX +/- .05 .XXX +/-.010
ANGULAR +/- .5
DO NOT SCALE DRAWING

SAIC

DRAWN	T. RUTLEDGE	11/27/2007
CHECKED		
QA		
MFG		
APPROVED		

NATIONAL DATA BUOY CENTER
John C. Stennis Space Center
Stennis Space Center, Mississippi,39529

TITLE

TUBE ENCLOSURE CAN

SIZE	DWG NO	REV
C	NDBC-X002	

SCALE

SHEET 1 OF 1

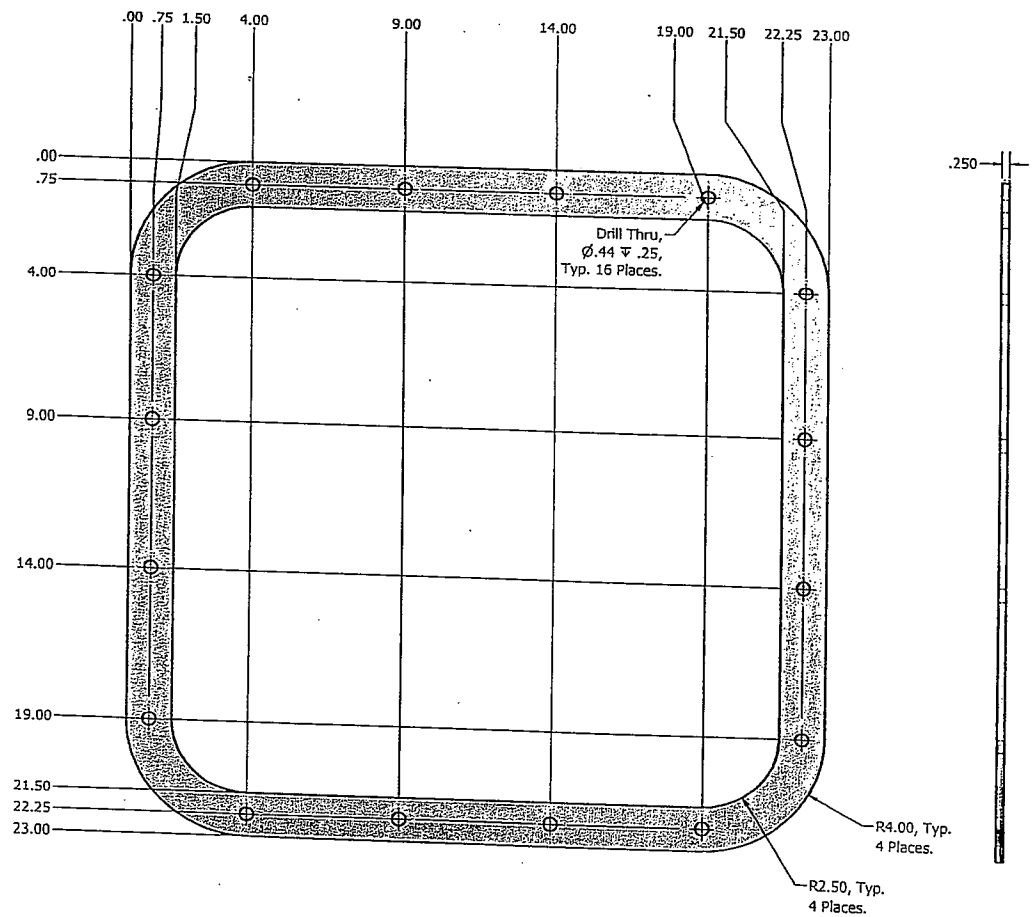

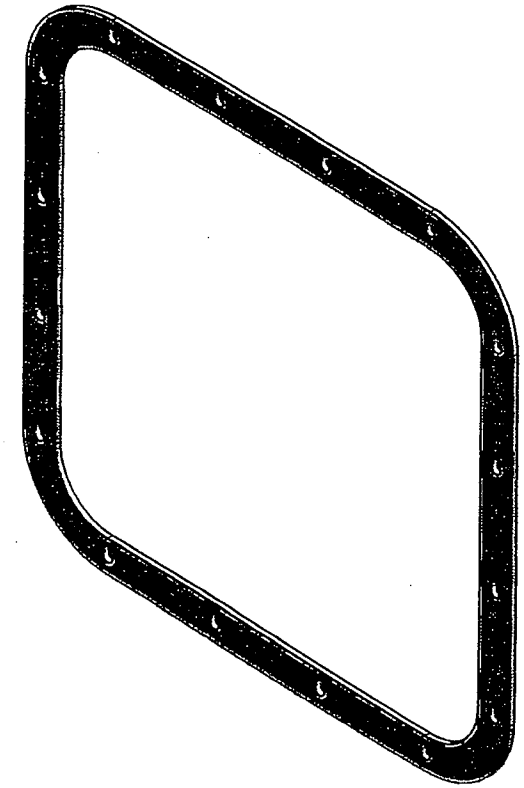

ITEM	QTY	PART NUMBER	DESCRIPTION
1	1	Lower Well Window Flange	316 SS., 23.0 X 23.0 X .25 Thk.

Parts List

UNLESS OTHERWISE SPECIFIED:
DIMENSIONS ARE IN INCHES
TOLERANCES
DECIMALS .XX +/- .05 .XXX +/-.010
ANGULAR +/- .5
DO NOT SCALE DRAWING

DRAWN	chuckc	5/5/2008
CHECKED		
QA		
MFG		
APPROVED		

NATIONAL DATA BUOY CENTER
John C. Stennis Space Center
Stennis Space Center, Mississippi,39529

TITLE
Lower Well Window Flange

SIZE C | DWG NO 02.3F01380 | REV

SCALE | SHEET 1 OF 1

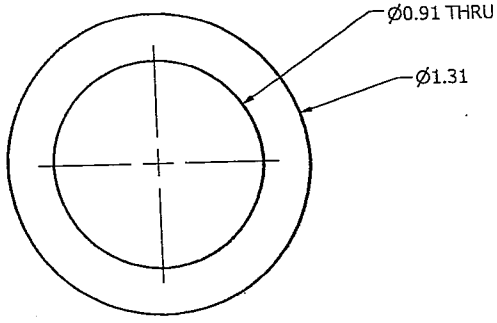

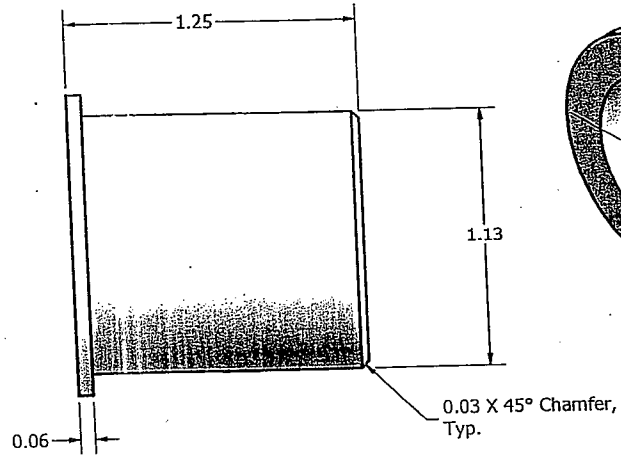

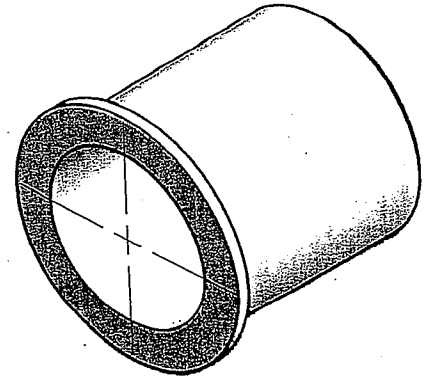

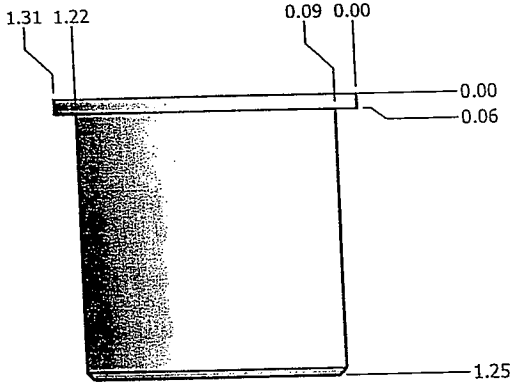

ITEM	QTY	PART NUMBER	DESCRIPTION	MATERIAL
1	1	McMaster-Carr - #8671K64	1.31" OD X .91" ID W/.06 X 1.31 SHOULDER	UHMW, White

Parts List

UNLESS OTHERWISE SPECIFIED:
DIMENSIONS ARE IN INCHES
TOLERANCES
DECIMALS .XX +/- .05 .XXX +/-.010
ANGULAR +/- .5
DO NOT SCALE DRAWING

DRAWN	chuckc	10/2/2007
CHECKED		
QA		
MFG		
APPROVED		

NATIONAL DATA BUOY CENTER
John C. Stennis Space Center
Stennis Space Center, Mississippi,39529

TITLE

MOORING PENDANT BUSHING

SIZE	DWG NO	REV
B	02.3F01366	

SCALE

SHEET 1 OF 1

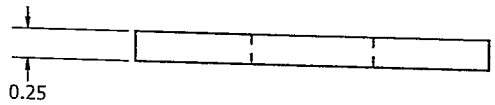

END VIEW

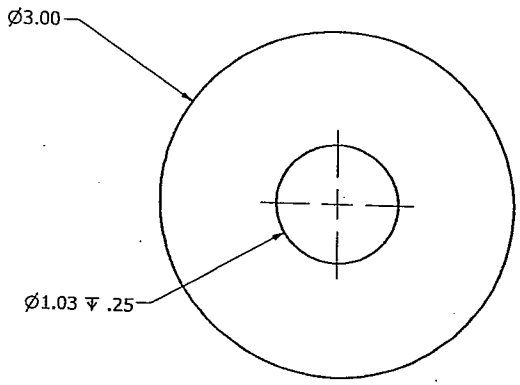

TOP VIEW
SCALE 1 : 1

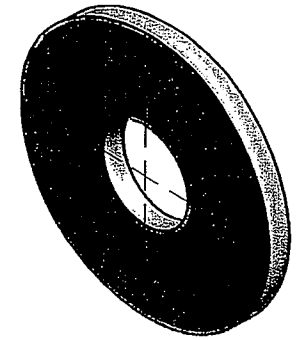

ISOMETRIC VIEW
SCALE 1 : 1

ITEM	QTY	PART NUMBER	DESCRIPTION	MATERIAL
1	1	NDBC Ctrl. # 7531	3.00 DIA. X .25 THK.	Stainless Ste

Parts List

UNLESS OTHERWISE SPECIFIED:
DIMENSIONS ARE IN INCHES
TOLERANCES
DECIMALS .XX +/- .05 .XXX +/-.010
ANGULAR +/- .5
DO NOT SCALE DRAWING

DRAWN	T. RUTLEDGE	10/2/2007
CHECKED		
QA		
MFG		
APPROVED		

NATIONAL DATA BUOY CENTER
John C. Stennis Space Center
Stennis Space Center, Mississippi,39529

TITLE
BRIDLE PADEYE DOUBLER

SIZE B | DWG NO 02.3F01365 | RE

SCALE | SHEET 1 OF 1

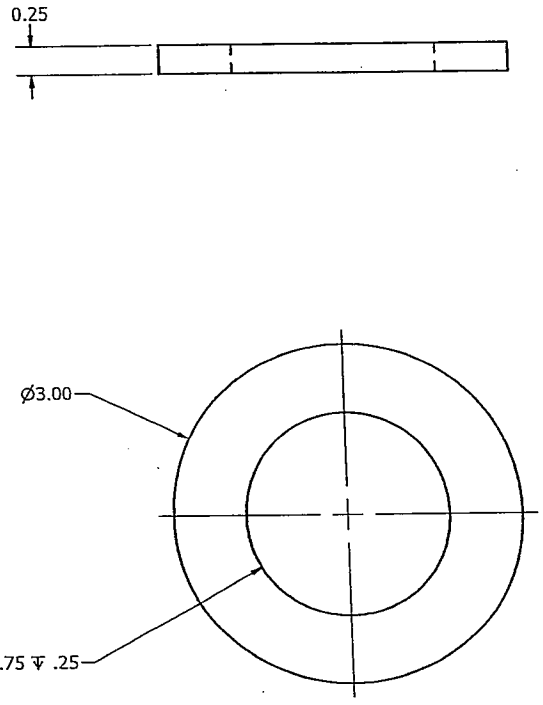

SCALE 1 : 1

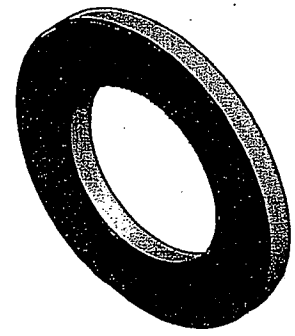

ISOMETRIC VIEW

ITEM	QTY	PART NUMBER	DESCRIPTION	MATERIAL
1	1	Mooring Padeye Doubler	PLATE, .25 X 3.00 DIA.	Steel

Parts List

UNLESS OTHERWISE SPECIFIED:
DIMENSIONS ARE IN INCHES
TOLERANCES
DECIMALS .XX +/- .05 .XXX +/-.010
ANGULAR +/- .5
DO NOT SCALE DRAWING

DRAWN	T. RUTLEDGE	10/3/2007
CHECKED		
QA		
MFG		
APPROVED		

NATIONAL DATA BUOY CENTER
John C. Stennis Space Center
Stennis Space Center, Mississippi,39529

TITLE

MOORING PADEYE DOUBLER

SIZE	DWG NO	REV
B	02.3F01364	

SCALE

SHEET 1 OF 1

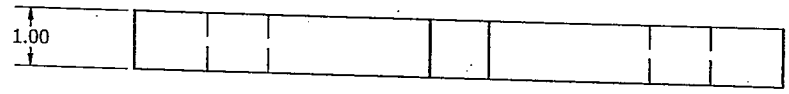

TOP VIEW

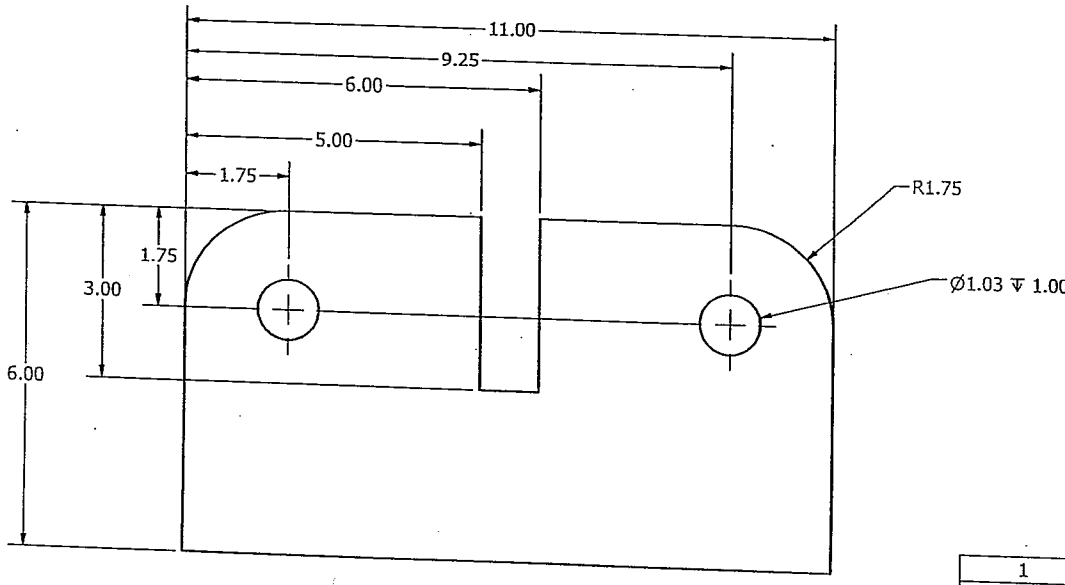

FRONT VIEW
SCALE 1 / 2

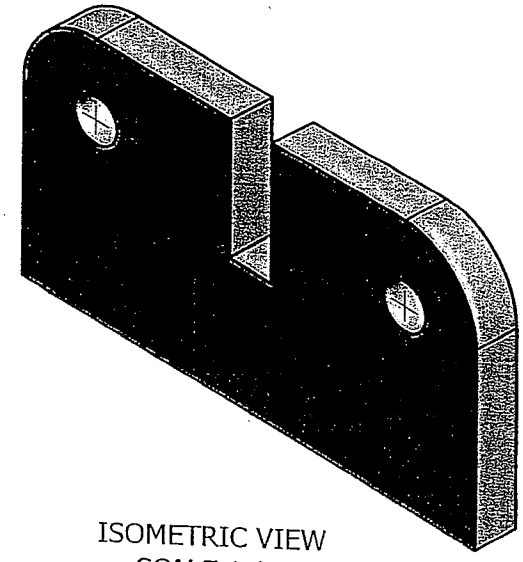

ISOMETRIC VIEW
SCALE 1 / 2

UNLESS OTHERWISE SPECIFIED:
DIMENSIONS ARE IN INCHES
TOLERANCES
DECIMALS .XX +/- .05 .XXX +/-.010
ANGULAR +/- .5
DO NOT SCALE DRAWING

ITEM	QTY	PART NUMBER	DESCRIPTION	MATERIAL
1	1	NDBC Ctrl. # 7460	PLATE, 1.00 X 6.00 X 11.00	Stainless Stee

Parts List

DRAWN	T.RUTLEDGE	10/2/2007
CHECKED		
QA		
MFG		
APPROVED		

NATIONAL DATA BUOY CENTER
John C. Stennis Space Center
Stennis Space Center, Mississippi,39529

TITLE
BRIDLE PADEYE 2

SIZE B | DWG NO 02.3F01363 | REV

SCALE | SHEET 1 OF 1

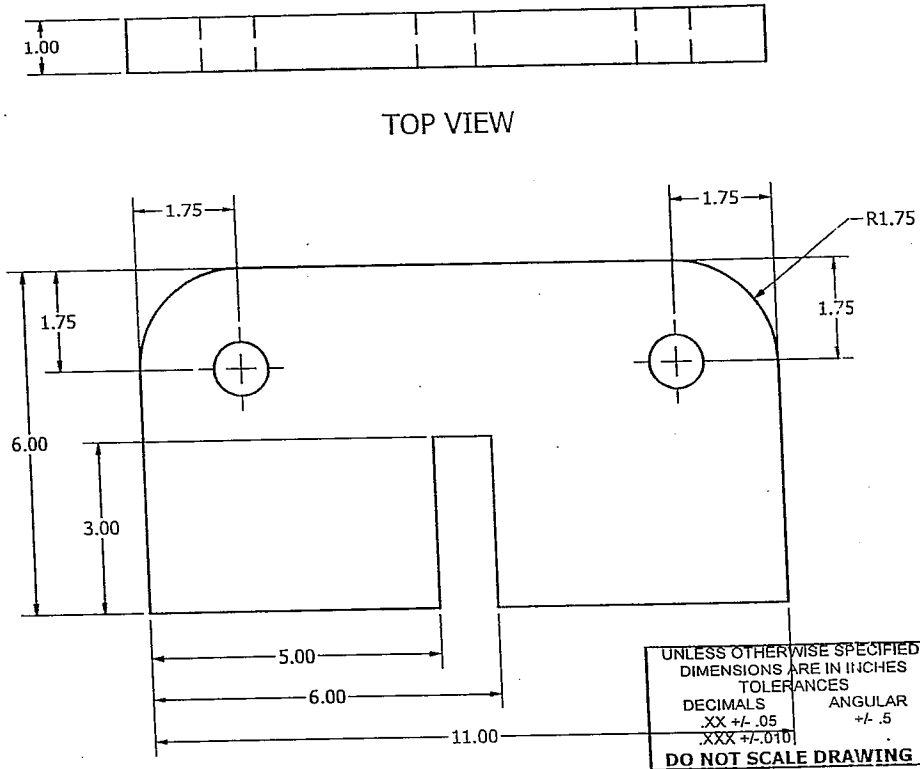

TOP VIEW

FRONT VIEW
SCALE 1 / 2

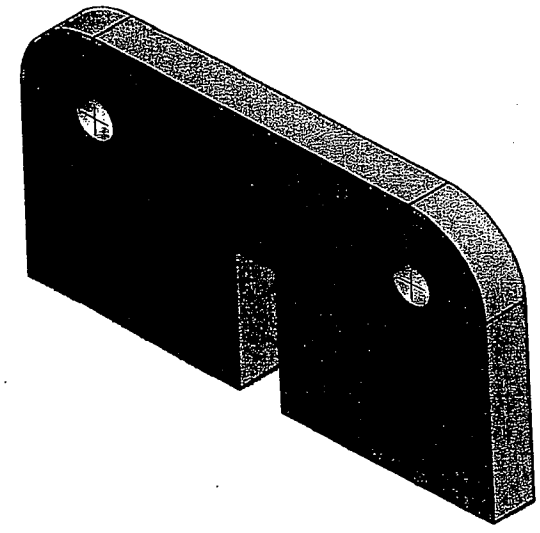

ISOMETRIC VIEW
SCALE 1 / 2

ITEM	QTY	PART NUMBER	DESCRIPTION	MATERIAL
1	1	NDBC Ctrl.# 7460	PLATE, 1.00 X 6.00 X 11.00	Stainless Steel

Parts List

UNLESS OTHERWISE SPECIFIED:
DIMENSIONS ARE IN INCHES
TOLERANCES
DECIMALS .XX +/- .05 .XXX +/-.010
ANGULAR +/- .5
DO NOT SCALE DRAWING

DRAWN	T. RUTLEDGE	10/2/2007
CHECKED		
QA		
MFG		
APPROVED		

NATIONAL DATA BUOY CENTER
John C. Stennis Space Center
Stennis Space Center, Mississippi,39529

TITLE
BRIDLE PADEYE 1

SIZE	DWG NO	REV
B	02.3F01362	

SCALE

SHEET 1 OF 1

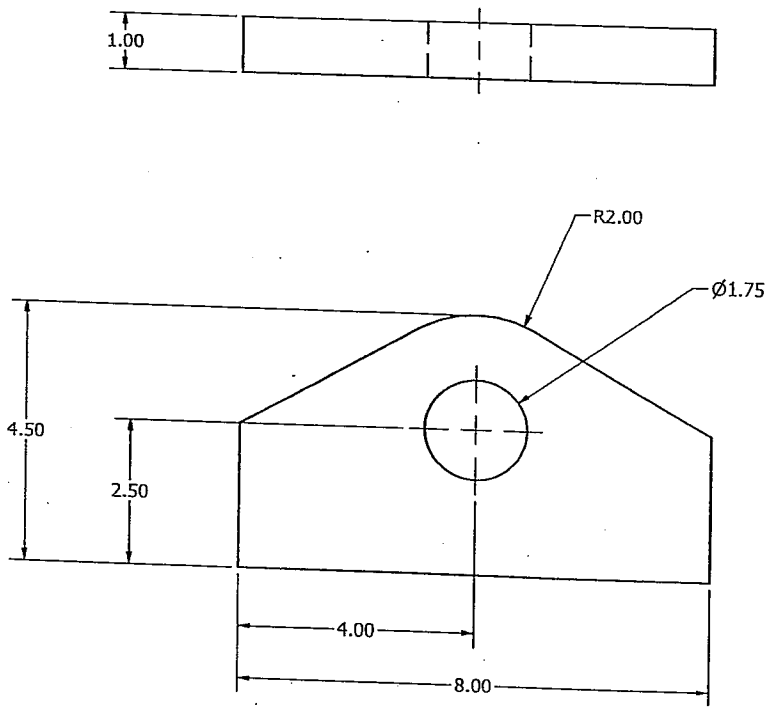

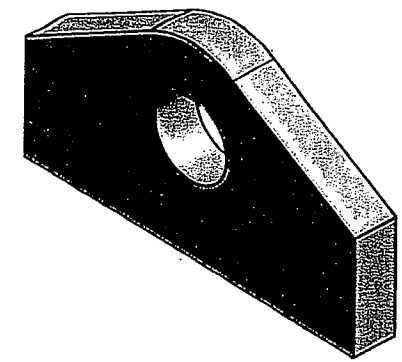

ISOMETRIC VIEW

ITEM	QTY	PART NUMBER	DESCRIPTION	MATERIA
1	1	Mooring Padeye	Plate, 1.00 x 4.50 x 8.00	Steel

Parts List

UNLESS OTHERWISE SPECIFIED:
DIMENSIONS ARE IN INCHES
TOLERANCES
DECIMALS .XX +/- .05 .XXX +/-.010
ANGULAR +/- .5
DO NOT SCALE DRAWING

DRAWN	T. RUTLEDGE	10/17/2007
CHECKED		
QA		
MFG		
APPROVED		

NATIONAL DATA BUOY CENTER
John C. Stennis Space Center
Stennis Space Center, Mississippi,39529

TITLE
MOORING PADEYE

SIZE B | DWG NO 02.3F01361 | REV

SCALE | SHEET 1 OF 1

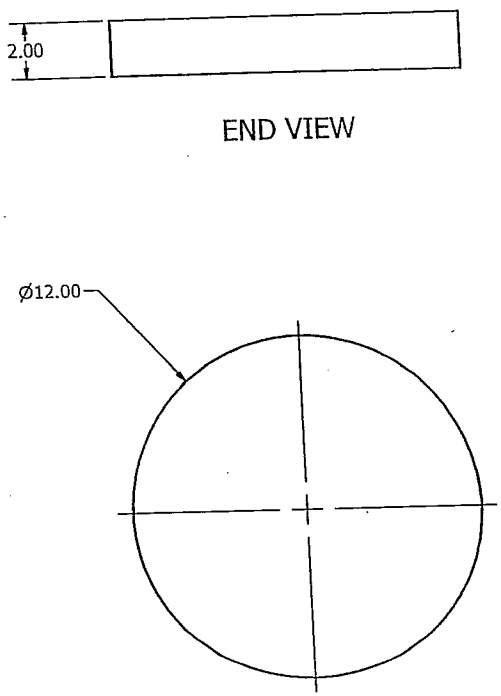

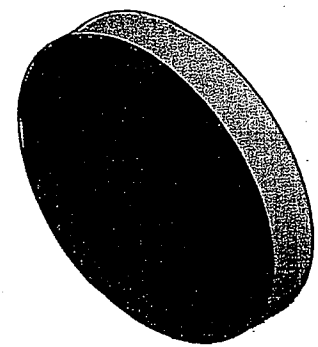

ISOMETRIC VIEW
SCALE 1 / 4

ITEM	QTY	PART NUMBER	DESCRIPTION	MATERIAL
1	1	NDBC Ctrl. #8423	PLATE, 12.00 DIA. X 2.00 THK.	Stainless Steel

Parts List

UNLESS OTHERWISE SPECIFIED:
DIMENSIONS ARE IN INCHES
TOLERANCES
DECIMALS .XX +/- .05 .XXX +/-.010
ANGULAR +/- .5
DO NOT SCALE DRAWING

DRAWN	T.RUTLEDGE	10/2/2007
CHECKED		
QA		
MFG		
APPROVED		

NATIONAL DATA BUOY CENTER
John C. Stennis Space Center
Stennis Space Center, Mississippi,39529

TITLE
BRIDLE LOWER PLATE

SIZE	DWG NO	REV
B	02.3F01360	

SCALE

SHEET 1 OF 1

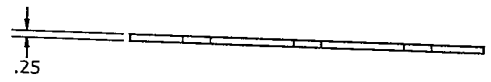

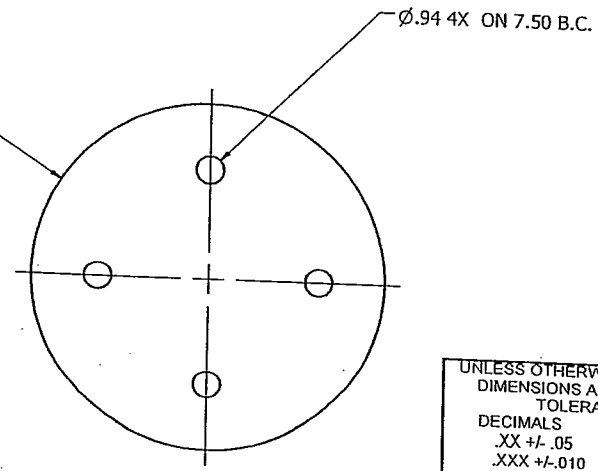

SCALE 1 / 4

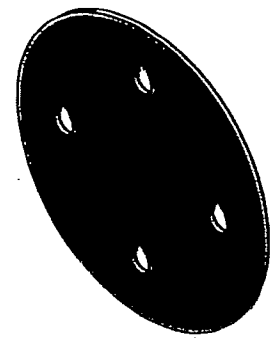

ISOMETRIC VIEW

ITEM	QTY	PART NUMBER	DESCRIPTION	MATERIA
1	1		12.00 DIA. X .25 THK.	Extren

Parts List

UNLESS OTHERWISE SPECIFIED:
DIMENSIONS ARE IN INCHES
TOLERANCES
DECIMALS .XX +/- .05 .XXX +/-.010
ANGULAR +/- .5
DO NOT SCALE DRAWING

DRAWN	chuckc	10/5/2007
CHECKED		
QA		
MFG		
APPROVED		

NATIONAL DATA BUOY CENTER
John C. Stennis Space Center
Stennis Space Center, Mississippi,39529

TITLE

MOORING PENDANT ISOLATOR PLATE

SIZE	DWG NO	REV
B	02.3F01359	

SCALE

SHEET 1 OF 1

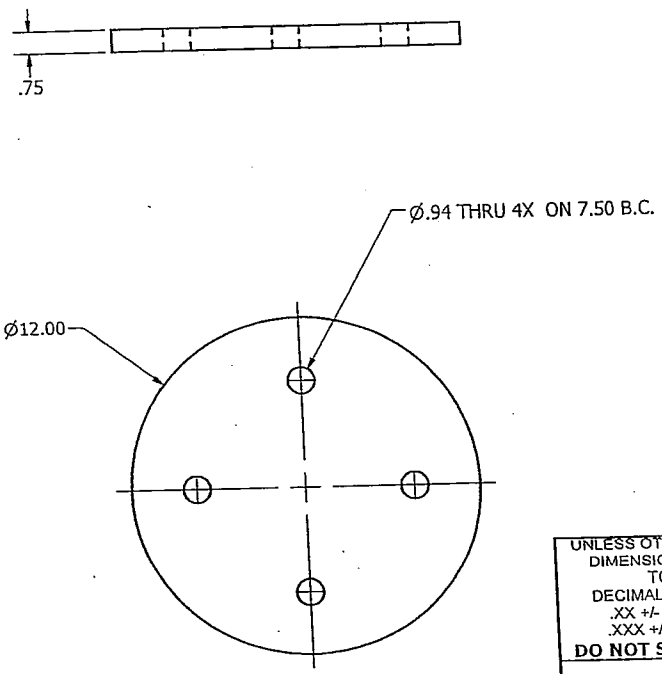

SCALE 1 / 4

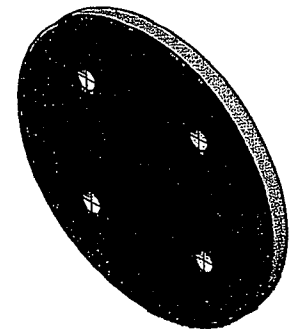

ISOMETRIC VIEW

ITEM	QTY	PART NUMBER	DESCRIPTION	MATERIAL
1	1	NDBC Ctrl.# 8422	PLATE, .75 X 12.00 DIA.	Stainless Steel

Parts List

UNLESS OTHERWISE SPECIFIED:
DIMENSIONS ARE IN INCHES
TOLERANCES
DECIMALS .XX +/- .05 .XXX +/-.010
ANGULAR +/- .5
DO NOT SCALE DRAWING

DRAWN	chuckc	10/4/2007
CHECKED		
QA		
MFG		
APPROVED		

NATIONAL DATA BUOY CENTER
John C. Stennis Space Center
Stennis Space Center, Mississippi,39529

TITLE
MOORING PENDANT SPACER PLATE

SIZE	DWG NO	REV
B	02.3F01358	

SCALE

SHEET 1 OF 1

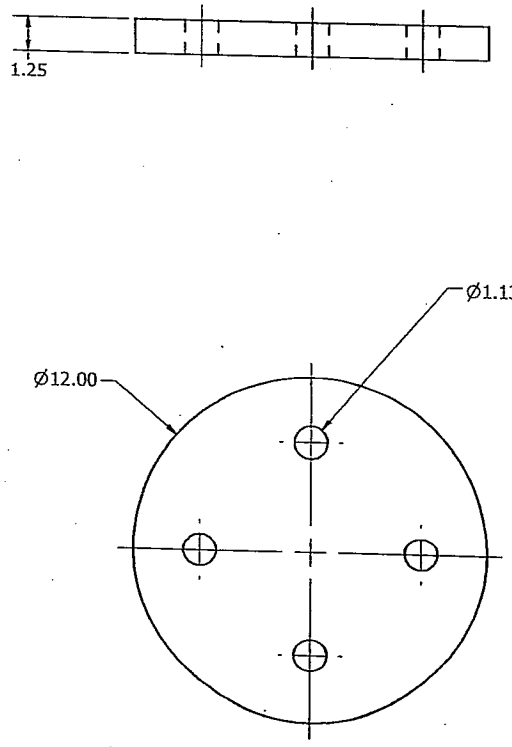

SCALE 1 / 4

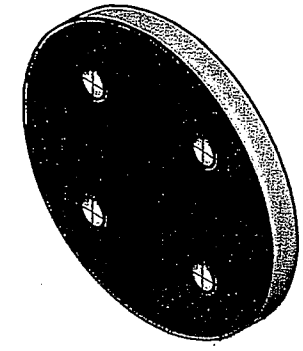

ISOMETRIC VIEW

ITEM	QTY	PART NUMBER	DESCRIPTION	MATERIA
1	1	Mooring Pendant Base Plate	PLATE, 1.25 X 12.00 DIA.	Steel

Parts List

UNLESS OTHERWISE SPECIFIED:
DIMENSIONS ARE IN INCHES
TOLERANCES
DECIMALS .XX +/- .05 .XXX +/-.010
ANGULAR +/- .5
DO NOT SCALE DRAWING

DRAWN	T. RUTLEDGE	10/4/2007
CHECKED		
QA		
MFG		
APPROVED		

NATIONAL DATA BUOY CENTER
John C. Stennis Space Center
Stennis Space Center, Mississippi,39529

TITLE

MOORING PENDANT BASE PLATE

SIZE B | DWG NO 02.3F01357 | RE

SCALE | SHEET 1 OF 1

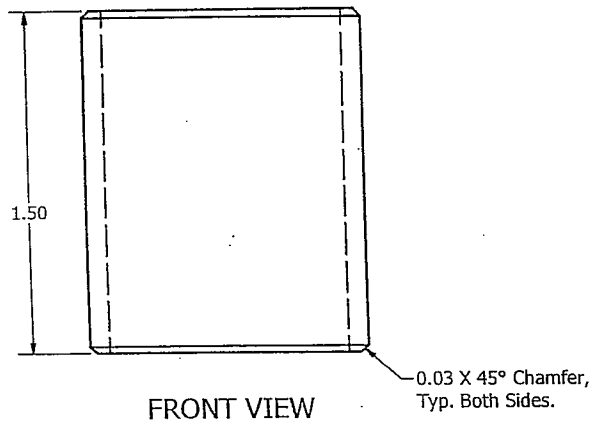

FRONT VIEW

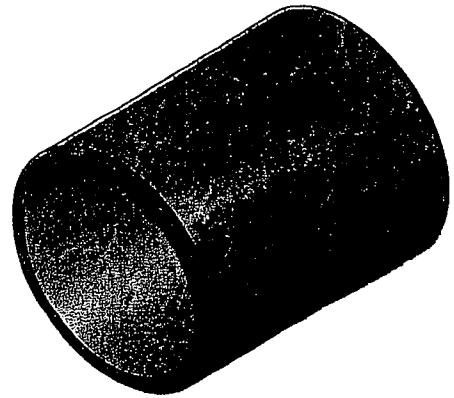

ISOMETRIC VIEW3
SCALE 2 : 1

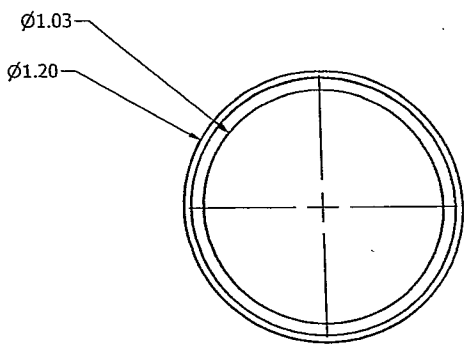

END VIEW
SCALE 2 : 1

ITEM	QTY	PART NUMBER	DESCRIPTION
1	1	TBD	BAR, ROUND, 1.20" DIA. CARBON IMPREGNATED PLASTIC (CIP), 1.50" LONG, ALL PLASTICS & FIBERGLASS INC.

Parts List

UNLESS OTHERWISE SPECIFIED:
DIMENSIONS ARE IN INCHES
TOLERANCES
DECIMALS .XX +/- .05 .XXX +/-.010
ANGULAR +/- .5
DO NOT SCALE DRAWING

DRAWN	chuckc	10/1/2007
CHECKED		
QA		
MFG		
APPROVED		

NATIONAL DATA BUOY CENTER
John C. Stennis Space Center
Stennis Space Center, Mississippi,39529

TITLE
BRIDLE LEG BUSHING

SIZE	DWG NO	REV
B	02.3F01356	

SCALE

SHEET 1 OF 1

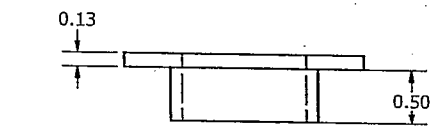

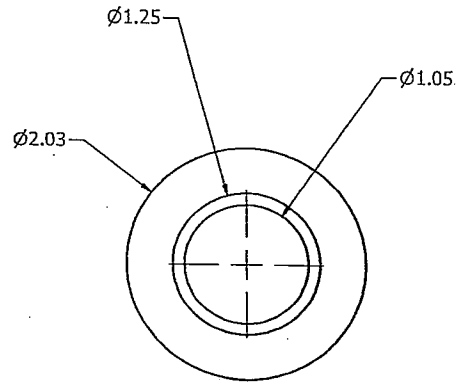

FRONT VIEW
SCALE 1 : 1

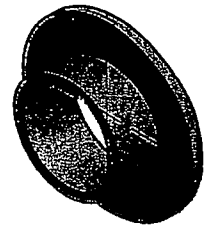

ISOMETRIC VIEW
SCALE 1 : 1

ITEM	QTY	PART NUMBER	DESCRIPTION
1	1	TBD	SHEET, 0.875 THK CARBON IMPREGNATED PLASTIC (CIP), ALL PLASTICS & FIBERGLASS INC.

Parts List

UNLESS OTHERWISE SPECIFIED:
DIMENSIONS ARE IN INCHES
TOLERANCES
DECIMALS .XX +/- .05 .XXX +/-.010
ANGULAR +/- .5
DO NOT SCALE DRAWING

DRAWN	T. RUTLEDGE	10/2/2007
CHECKED		
QA		
MFG		
APPROVED		

NATIONAL DATA BUOY CENTER
John C. Stennis Space Center
Stennis Space Center, Mississippi,39529

TITLE
BRIDLE LEG WASHER

SIZE B
DWG NO 02.3F01355
RE
SCALE
SHEET 1 OF 1

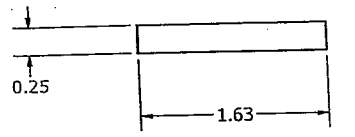

END VIEW

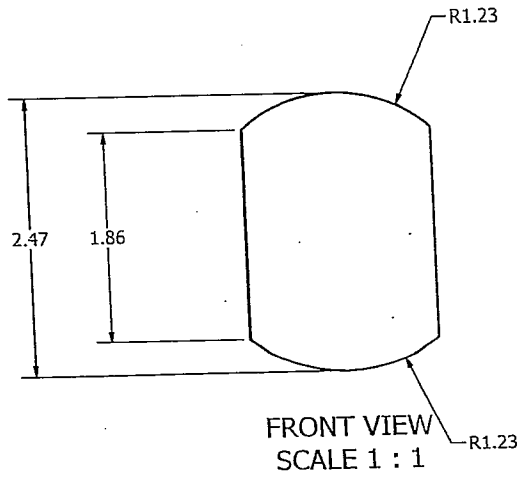

FRONT VIEW
SCALE 1 : 1

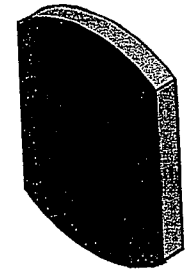

ISOMETRIC VIEW
SCALE 1 : 1

ITEM	QTY	PART NUMBER	DESCRIPTION	MATERIAL
1	1	Bridle Leg End Cap 2	.25 X 1.63 X 2.47	Stainless Steel

Parts List

UNLESS OTHERWISE SPECIFIED:
DIMENSIONS ARE IN INCHES
TOLERANCES
DECIMALS .XX +/- .05 .XXX +/-.010
ANGULAR +/- .5
DO NOT SCALE DRAWING

DRAWN	T. RUTLEDGE	10/1/2007
CHECKED		
QA		
MFG		
APPROVED		

NATIONAL DATA BUOY CENTER
John C. Stennis Space Center
Stennis Space Center, Mississippi,39529

TITLE
BRIDLE LEG NARROW END CAP

SIZE	DWG NO	REV
B	02.3F01354	

SCALE | SHEET 1 OF 1

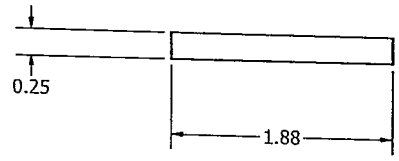

END VIEW

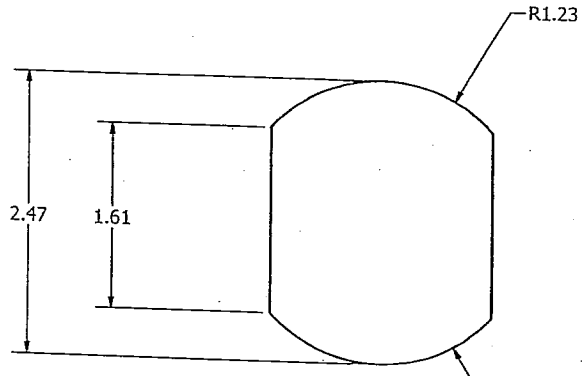

FRONT VIEW
SCALE 1 : 1

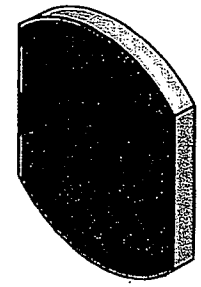

ISOMETRIC VIEW
SCALE 1 : 1

UNLESS OTHERWISE SPECIFIED:
DIMENSIONS ARE IN INCHES
TOLERANCES
DECIMALS .XX +/- .05 .XXX +/-.010
ANGULAR +/- .5
DO NOT SCALE DRAWING

ITEM	QTY	PART NUMBER	DESCRIPTION	MATERIAL
1	1	Bridle Leg End Cap	.25 X 1.88 X 2.47	Stainless Steel

Parts List

DRAWN	T. RUTLEDGE	10/1/2007
CHECKED		
QA		
MFG		
APPROVED		

NATIONAL DATA BUOY CENTER
John C. Stennis Space Center
Stennis Space Center, Mississippi,39529

TITLE
BRIDLE LEG WIDE END CAP

SIZE B | DWG NO 02.3F01353 | REV

SCALE | SHEET 1 OF 1

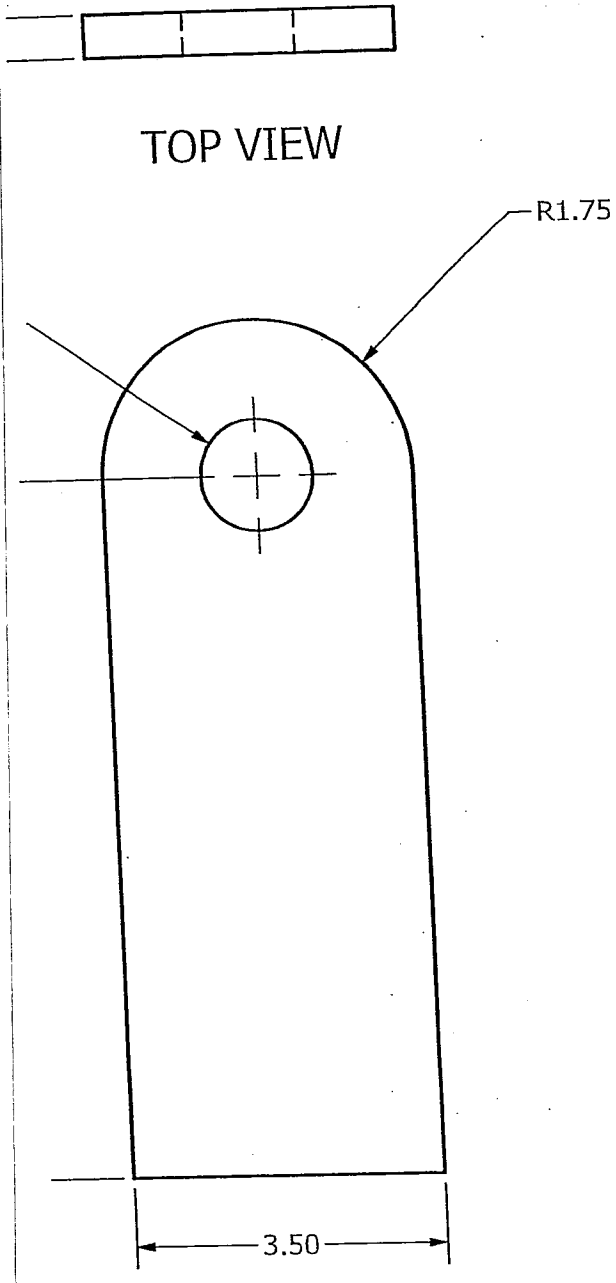

TOP VIEW

FRONT VIEW

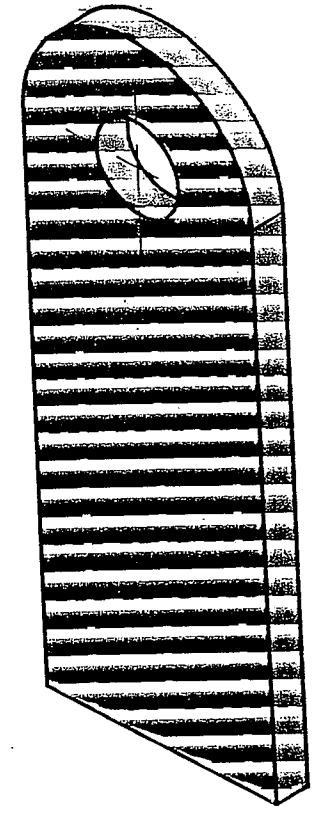

ISOMETRIC VIEW
SCALE 1 / 2

ITEM	QTY	PART NUMBER	Ctrl. #	DESCRIP
1	1	Bridle Padeye	8424	PLATE, .50 X 3.5

Parts List

UNLESS OTHERWISE SPECIFIED:
DIMENSIONS ARE IN INCHES
TOLERANCES
DECIMALS .XX +/- .05 .XXX +/-.010
ANGULAR +/- .5
DO NOT SCALE DRAWING

DRAWN	T. RUTLEDGE	10/2/2007
CHECKED		
QA		
MFG		
APPROVED		

NATIONAL DAT
John C. Stenni
Stennis Space Ce

TITLE

BRIDLE LEG PADEYE

SIZE | DWG NO

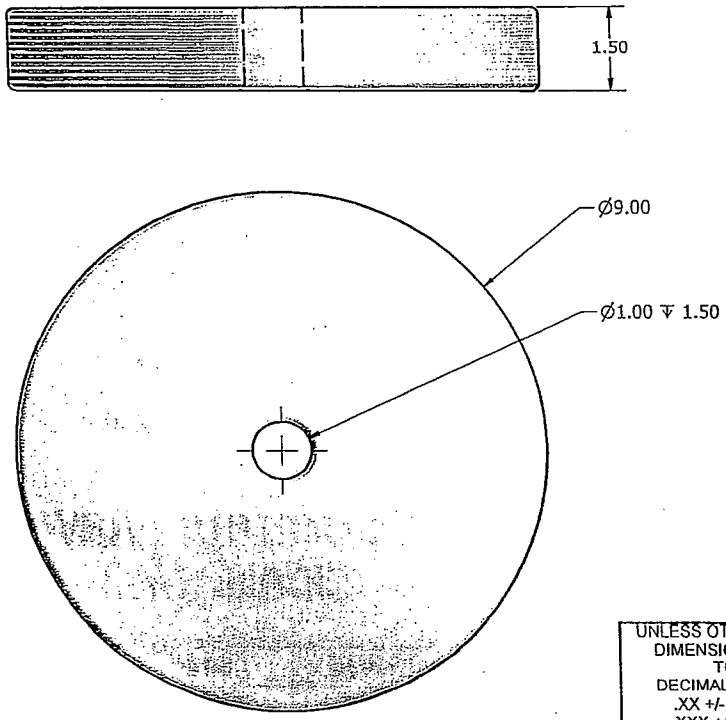

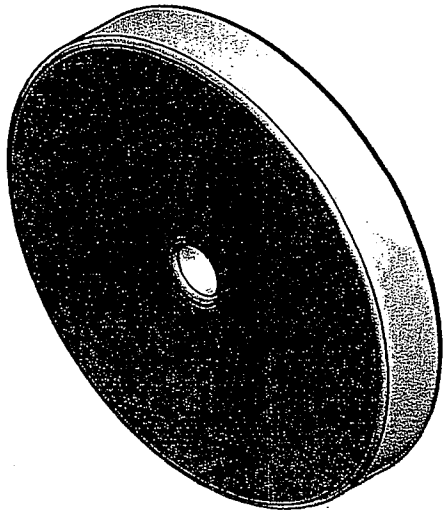

LEAD BALLAST -001

UNLESS OTHERWISE SPECIFIED:
DIMENSIONS ARE IN INCHES
TOLERANCES

DECIMALS	ANGULAR
.XX +/- .05	+/- .5
.XXX +/-.010	

DO NOT SCALE DRAWING

ITEM	QTY	PART NUMBER	Ctrl. #	DESCRIPTION	MATERIAL
1	1	Lead Ballast	N/A	Disk, Lead, 9.00" Dia. X 1.50" Thk.	Lead

Parts List

DRAWN terryr	10/1/2007	**NATIONAL DATA BUOY CENTER** John C. Stennis Space Center Stennis Space Center, Mississippi,39529
CHECKED		TITLE
QA		Lead Ballast
MFG		
APPROVED		SIZE B / DWG NO 02.3F01351 / REV
		SCALE / SHEET 1 OF 1

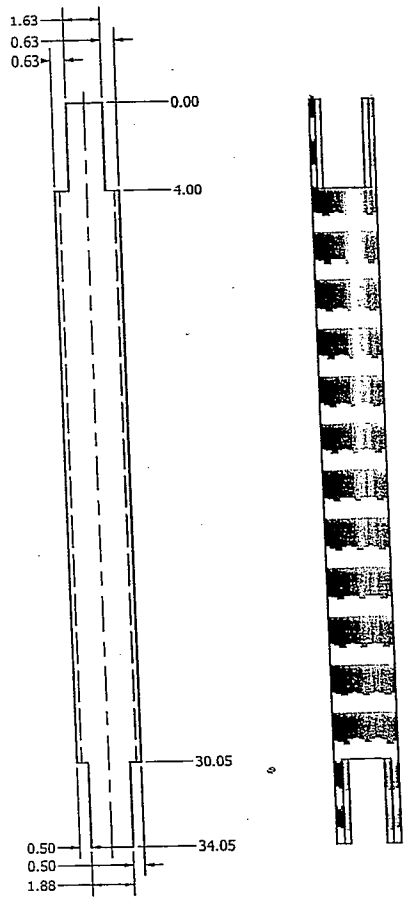

FRONT VIEW
SCALE 1 / 4

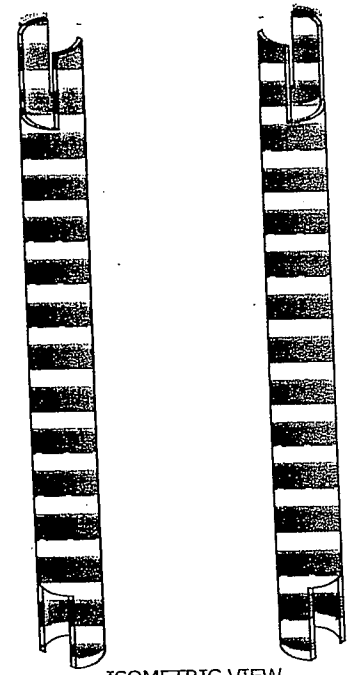

ISOMETRIC VIEW
SCALE 1 / 4

ITEM	QTY	PART NUMBER	Ctrl. #	DESCRIPTION	MATERIAL
1	1	Bridle Leg Pipe	8406	PIPE, 2.50 SCH. 40 X 34.05 LG.	Stainless Steel

Parts List

UNLESS OTHERWISE SPECIFIED:
DIMENSIONS ARE IN INCHES
TOLERANCES
DECIMALS .XX +/- .05 .XXX +/-.010
ANGULAR +/- .5
DO NOT SCALE DRAWING

DRAWN	chuckc	10/2/2007
CHECKED		
QA		
MFG		
APPROVED		

NATIONAL DATA BUOY CENTER
John C. Stennis Space Center
Stennis Space Center, Mississippi,39529

TITLE
BRIDLE LEG PIPE

SIZE	DWG NO.	REV
C	02.3F1350	

SCALE

SHEET 1 OF 1

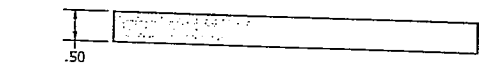

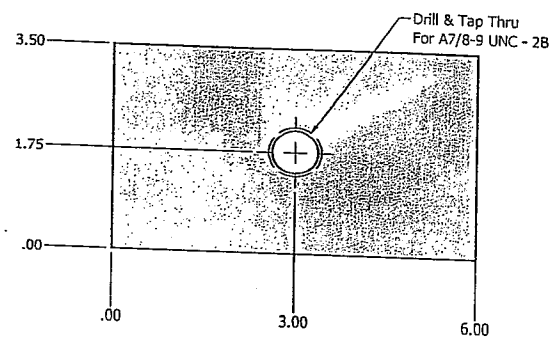

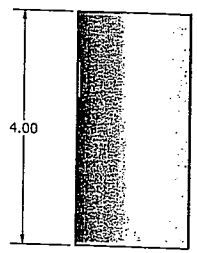

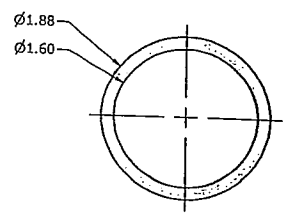

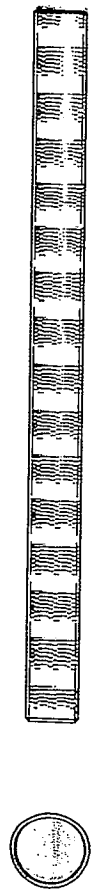

UNLESS OTHERWISE SPECIFIED:
DIMENSIONS ARE IN INCHES
TOLERANCES
DECIMALS .XX +/- .05 .XXX +/-.010
ANGULAR +/- .5
DO NOT SCALE DRAWING

DRAWN	chuckc	1/9/2009
CHECKED		
QA		
MFG		
APPROVED		

NATIONAL DATA BUOY CENTER
John C. Stennis Space Center
Stennis Space Center, Mississippi,39529

TITLE
Ballast Assembly

SIZE	DWG NO	REV
C	02.3F01314	

SCALE

SHEET 2 OF 2

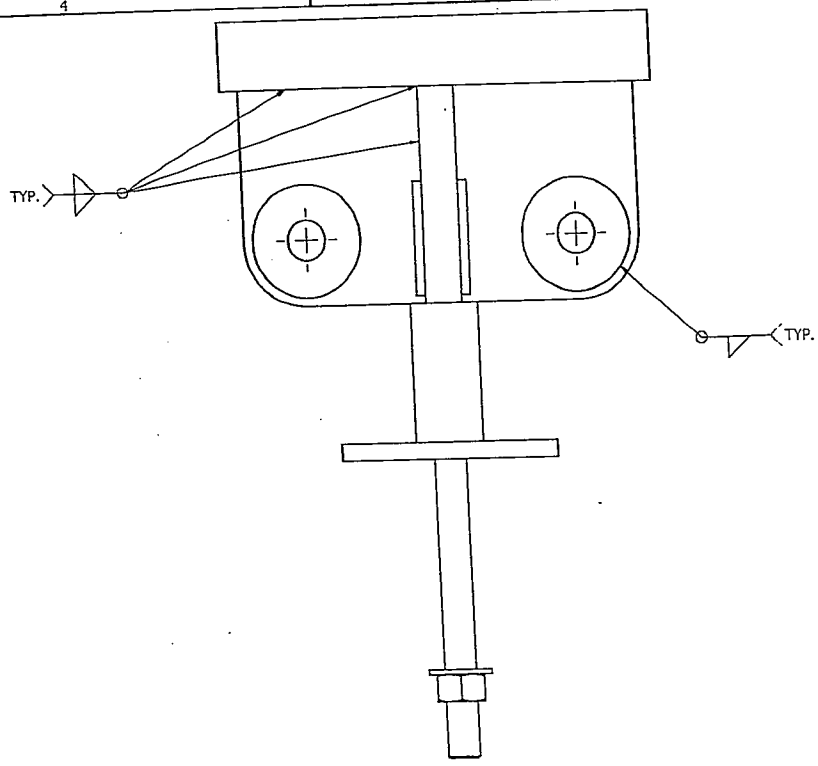

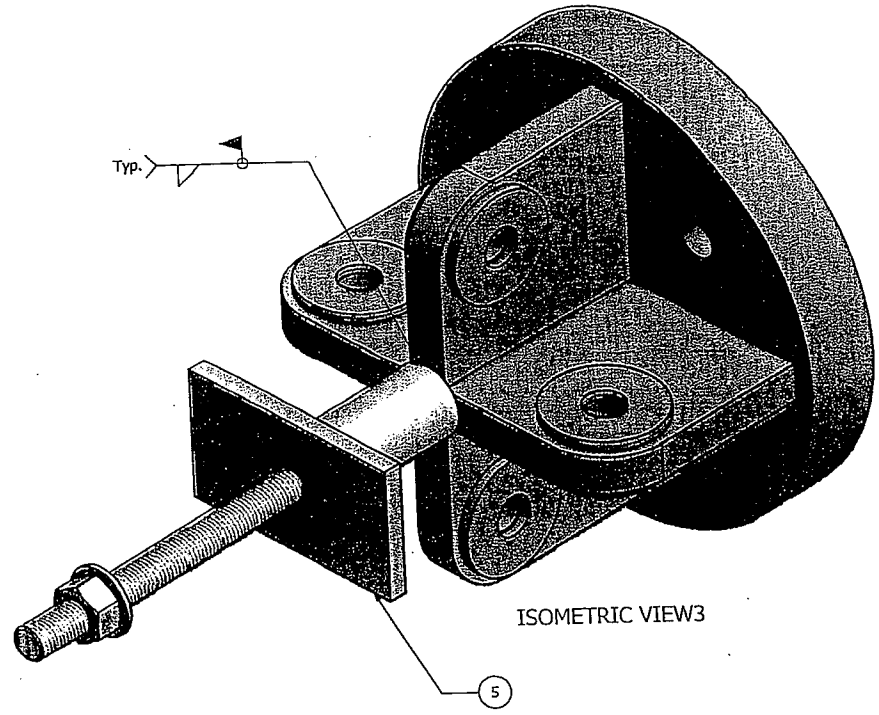

ISOMETRIC VIEW3

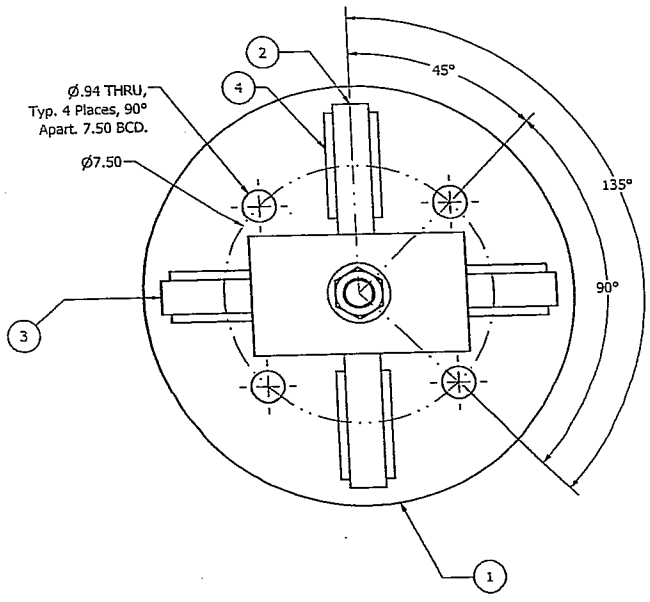

ITEM	QTY	PART NUMBER	DESCRIPTION	MATERIAL
5	1	02.3F01314	2.3 Meter Ballast Assembly	Stainless Steel
4	8	02.3F01365-001	Bridle Padeye Doubler	Stainless Steel
3	1	02.3F01363-001	Bridle Padeye 2	Stainless Steel
2	1	02.3F01362-001	Bridle Padeye 1	Stainless Steel
1	1	02.3F1360-001	Bridle Lower Plate	Stainless Steel

Parts List

UNLESS OTHERWISE SPECIFIED:
DIMENSIONS ARE IN INCHES
TOLERANCES
DECIMALS .XX +/- .05 .XXX +/-.010
ANGULAR +/- .5
DO NOT SCALE DRAWING

DRAWN	T. RUTLEDGE	10/11/2007
CHECKED		
QA		
MFG		
APPROVED		

NATIONAL DATA BUOY CENTER
John C. Stennis Space Center
Stennis Space Center, Mississippi,39529

TITLE

BRIDLE LOWER PLATE WELDMENT

SIZE	DWG NO	REV
C	02.3F1304	
SCALE	SHEET 1 OF 1	

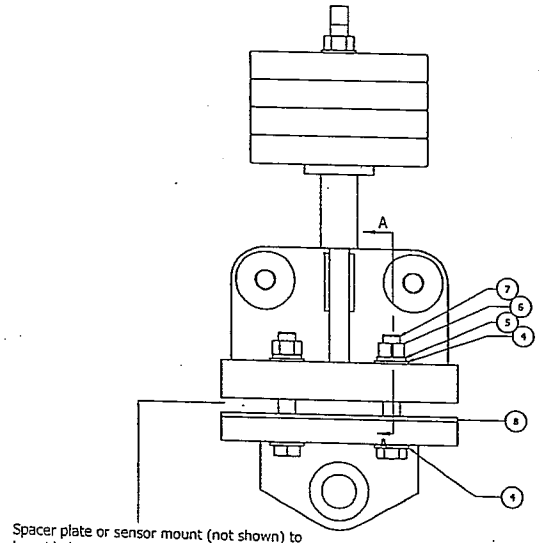

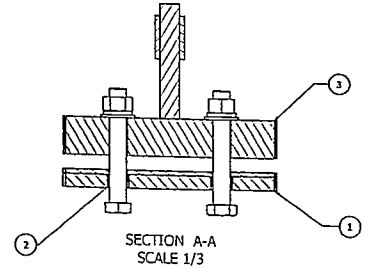

SECTION A-A
SCALE 1/3

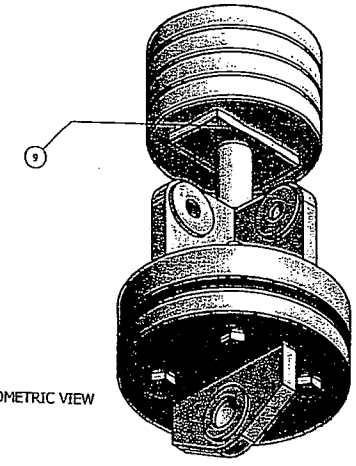

ISOMETRIC VIEW

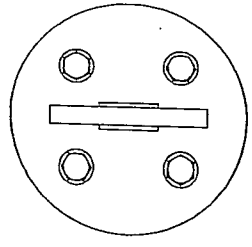

SCALE 1/3

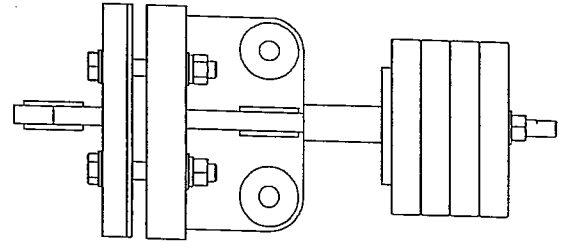

ITEM	QTY	PART NUMBER	DESCRIPTION	MATERI
9	1	02.3F01314	2.3 METER BALLAST ASSEMBLY	Stainless S
8	1	02.3F01355-001	MOORING PENDANT ISOLATOR PLATE	Extren
7	4	ANSI B18.2.1 - 7/8-9 UNC - 6	Hex Cap Screw	Steel, M
6	4	ANSI B18.2.2 - 7/8 - 9	Hex Nut	Steel, M
5	4	ASME B18.21.1 - 7/8 Regular	Helical Spring Lock Washer	Steel, M
4	8	ANSI B18.22.1 - 7/8 - narrow	Washer A	Steel, M
3	1	02.3F01304-001	BRIDLE LOWER PLATE WELDMENT	Welded Alumin
2	4	02.3F01366-001	MOORING PENDANT SHOULDER BUSHING	UHMW, W
1	1	02.3F01305-001	MOORING PENDANT WELDMENT	Welded Alumin

Parts List

UNLESS OTHERWISE SPECIFIED DIMENSIONS ARE IN INCHES
TOLERANCES
DECIMALS .XX ± .05 .XXX ± .010
ANGULAR ± .5
DO NOT SCALE DRAWING

DRAWN chucke 10/11/2007
CHECKED
QA
MFG
APPROVED

NATIONAL DATA BUOY CENTER
John C. Stennis Space Center
Stennis Space Center, Mississippi,39529

TITLE
BRIDLE MOORING PENDANT ASSEMB

SIZE D
DWG NO 02.3F01303
SCALE
SHEET 1 OF 1

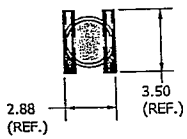

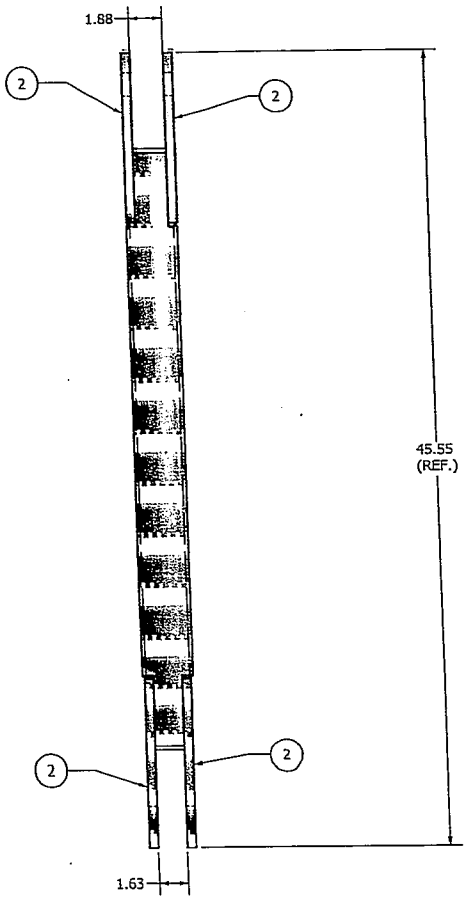

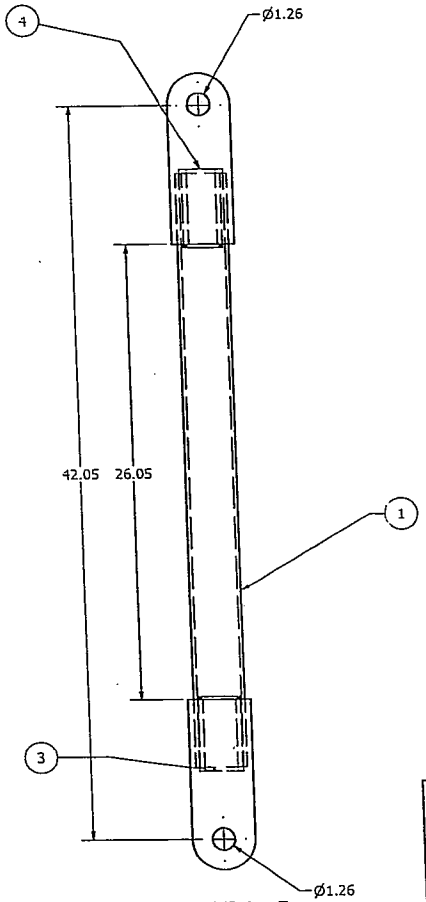

SCALE 1 : 5

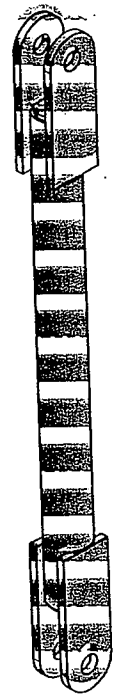

ITEM	QTY	PART NUMBER	DESCRIPTION	MATERIAL
4	1	02.3F01354-001	Bridle Leg Narrow End Cap	Stainless Steel
3	1	02.3F01353-001	Bridle Leg Wide End Cap	Stainless Steel
2	4	02.3F01352-001	Bridle Leg Padeye	Stainless Steel
1	1	02.3F01350-001	Bridle Leg Pipe	Stainless Steel

Parts List

UNLESS OTHERWISE SPECIFIED:
DIMENSIONS ARE IN INCHES
TOLERANCES
DECIMALS .XX +/- .05 .XXX +/-.010
ANGULAR +/- .5
DO NOT SCALE DRAWING

DRAWN	chuckc	10/11/2007
CHECKED		
QA		
MFG		
APPROVED		

NATIONAL DATA BUOY CENTER
John C. Stennis Space Center
Stennis Space Center, Mississippi,39529

TITLE
BRIDLE LEG ASSEMBLY

SIZE	DWG NO	REV
C	02.3F01302	

SCALE

SHEET 1 OF 1

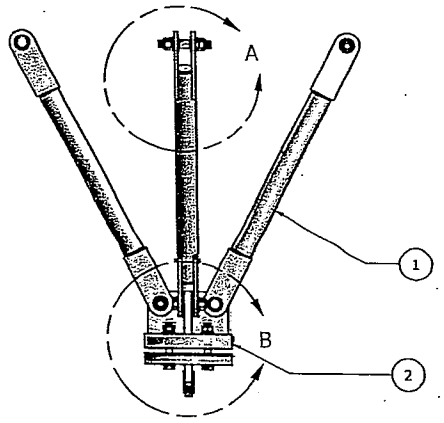

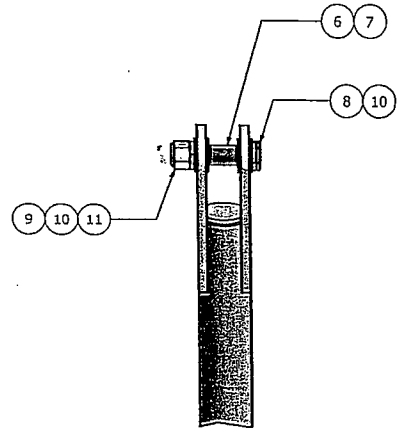

DETAIL A
SCALE 0.20 : 1

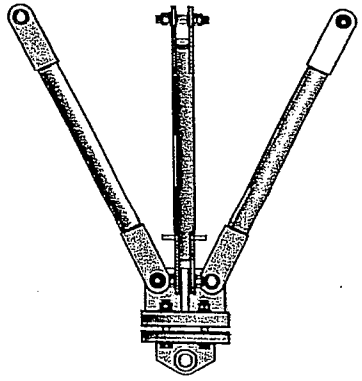

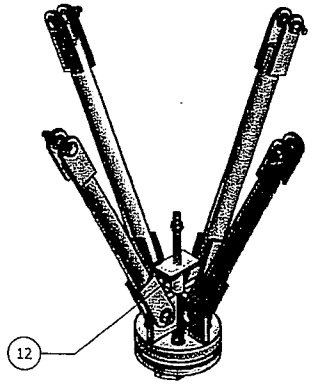

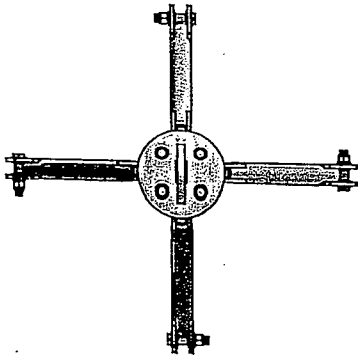

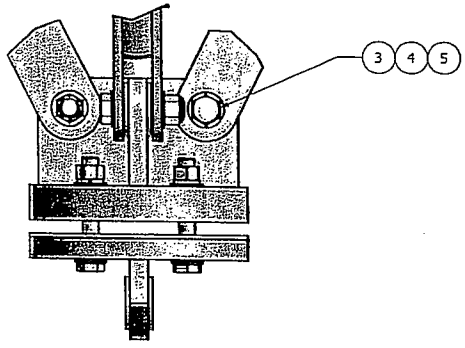

DETAIL B
SCALE 0.20 : 1

ITEM	QTY	PART NUMBER	DESCRIPTION
12	1	02.3F01314	2.3 METER BALLAST ASSEMBLY
11	8	McMASTER-CARR / 90715A055 NDBC CTRL #TBD	NUT, NYLOCK 1.000-8, 316 SST, 1.0 HEX HD
10	8	McMASTER-CARR / 90107A038 NDBC CTRL #2176	WASHER, FLAT, 1.000, 1.0625 ID 2.00 OD, 316 SST, 1.0 REG
9	4	McMASTER-CARR / 92147A038 NDBC CTRL #2127	WASHER, LOCK, 1.00 316 SST, 1.0 HELICAL SPRING, 1.024 ID 1.656" OD
8	4	McMASTER-CARR / 92186A924 NDBC CTRL #6929	SCREW, CAP 1.000-8 X 5.00 316 SST, 1.0 HEX HD
7	4	02.3F01355-001	BRIDLE LEG WASHER
12	4	02.3F01356-001	BRIDLE LEG BUSHING
5	8	McMASTER-CARR / 90107A038 NDBC CTRL #TBD	WASHER, FLAT, 1.031 ID 2.00 OD, 316 SST, 1.0 REG, 0.13 THK
4	4	McMASTER-CARR / 90715A055 NDBC CTRL #TBD	NUT, NYLOCK 1.0-8, 316 SST, 1.0 HEX HD
3	4	McMASTER-CARR / 92186A920 NDBC CTRL #TBD	SCREW, CAP 1.0-8 X 4.00 316 SST, 1.0 HEX HD
2	1	02.3F01303-001	BRIDLE MOORING PENDANT ASSEMBLY
1	4	02.3F01302-001	BRIDLE LEG ASSEMBLY

-001 PARTS LIST

UNLESS OTHERWISE SPECIFIED:
DIMENSIONS ARE IN INCHES
TOLERANCES
DECIMALS .XX +/- .05 .XXX +/-.010
ANGULAR +/- .5
DO NOT SCALE DRAWING

DRAWN	Chuckc	10/31/2007
CHECKED		
QA		
MFG		
APPROVED		

NATIONAL DATA BUOY CENTER
John C. Stennis Space Center
Stennis Space Center, Mississippi,39529

TITLE
2.3 METER STANDARD BUOY BASIC BRIDLE ASSEMBLY

SIZE	DWG NO	REV
C	02.3F01301	

SCALE

SHEET 1 OF 1

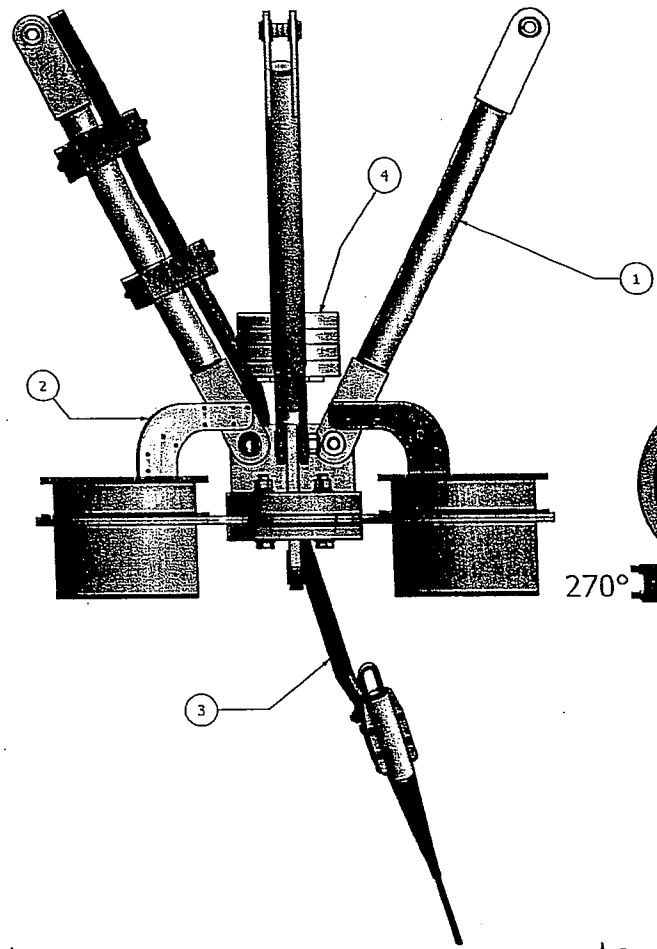

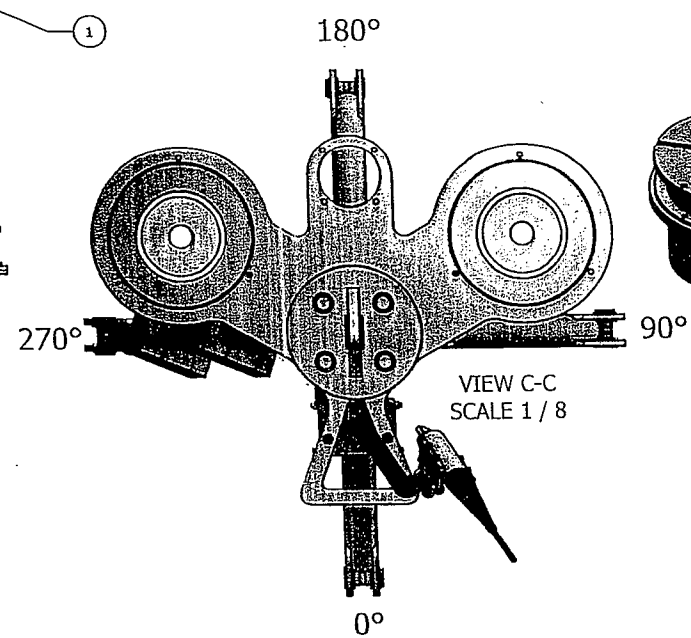

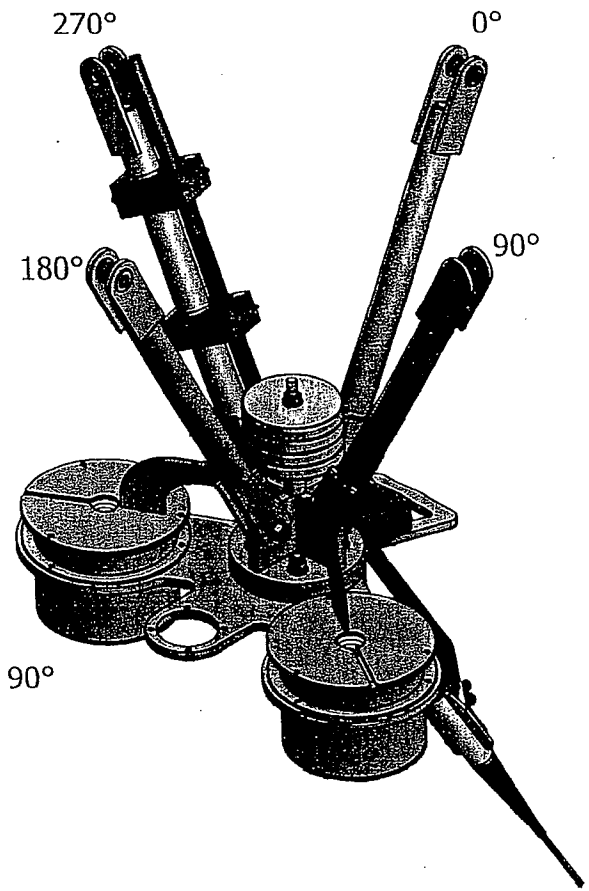

ITEM	QTY	PART NUMBER	DESCRIPTION
4	1	02.3F01314	2.3 METER BALLAST ASSEMBLY
3	1	02.3F01313	2.3 METER IM HOSE PROTECTION ASSEMBLY
2	1	02.3F01306-001	AM TRANSDUCER MOUNT
1	1	02.3F01301-001	2.3 METER STANDARD BUOY BASIC BRIDLE ASSEMBLY

Parts List

UNLESS OTHERWISE SPECIFIED:
DIMENSIONS ARE IN INCHES
TOLERANCES
DECIMALS .XX +/- .05 .XXX +/-.010
ANGULAR +/- .5
DO NOT SCALE DRAWING

DRAWN	chuckc	1/8/2008
CHECKED		
QA		
MFG		
APPROVED		

NATIONAL DATA BUOY CENTER
John C. Stennis Space Center
Stennis Space Center, Mississippi,39529

TITLE
2.3 Meter Standard Buoy Bridle Mechanical Assembly

SIZE C | DWG NO 02.3F01300 | REV
SCALE | SHEET 3 OF 3

2.3 Meter Standard Buoy Bridle Mechanical Assembly -003
Dart Configuration

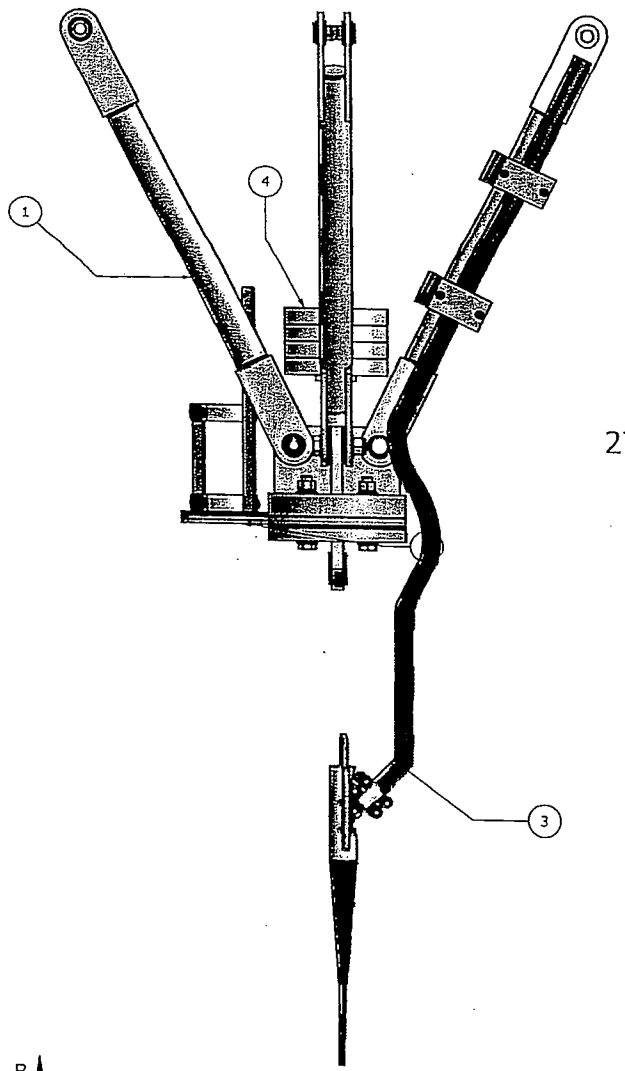

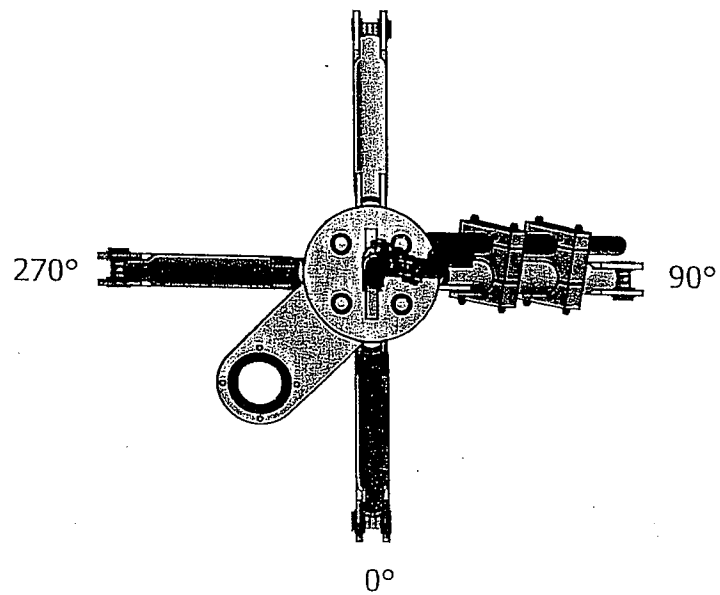

VIEW B-B
SCALE 1 / 8

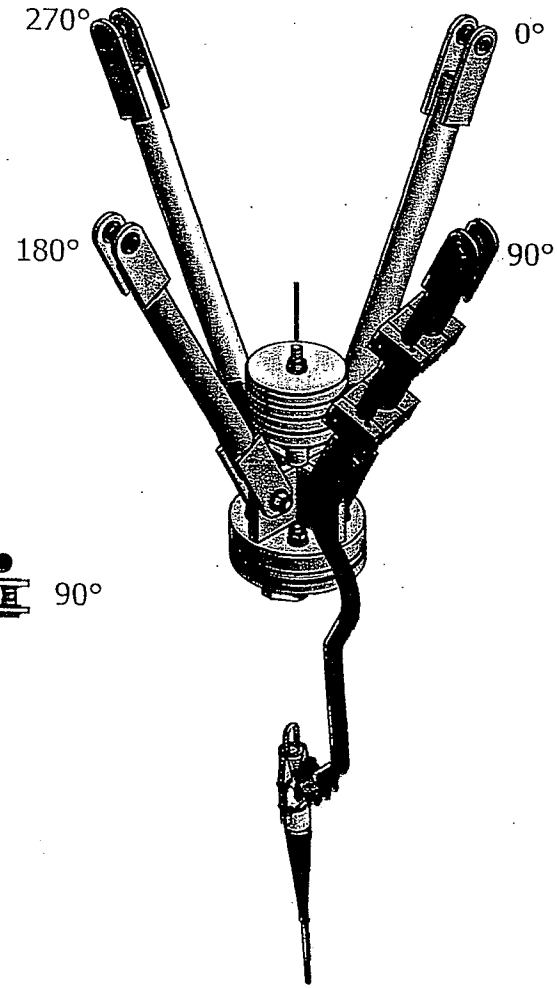

2.3 Meter Standard Buoy Bridle Mechanical Assembly -002
SCM Configuration

ITEM	QTY	PART NUMBER	DESCRIPTION
4	1	02.3F01314	2.3 METER BALLAST ASSEMBLY
3	1	02.3F01313	2.3 METER IM HOSE PROTECTION ASSEMBLY
2	1	02.3F01309-001	SURFACE CURRENT METER MOUNT
1	1	02.3F01301-001	2.3 METER STANDARD BUOY BASIC BRIDLE ASSEMBLY

Parts List

UNLESS OTHERWISE SPECIFIED:
DIMENSIONS ARE IN INCHES
TOLERANCES
DECIMALS .XX +/- .05 .XXX +/-.010
ANGULAR +/- .5
DO NOT SCALE DRAWING

DRAWN chuckc 1/8/2008
CHECKED
QA
MFG
APPROVED

NATIONAL DATA BUOY CENTER
John C. Stennis Space Center
Stennis Space Center, Mississippi,39529

TITLE
2.3 Meter Standard Buoy Bridle Mechanical Assembly

SIZE C
DWG NO 02.3F01300
REV
SCALE
SHEET 2 OF 3

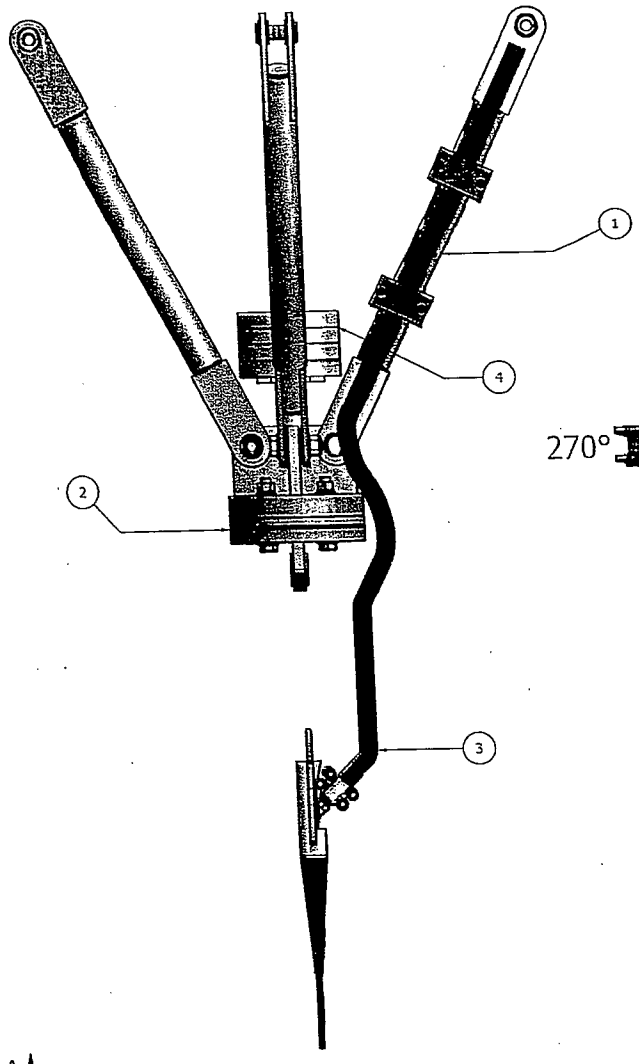

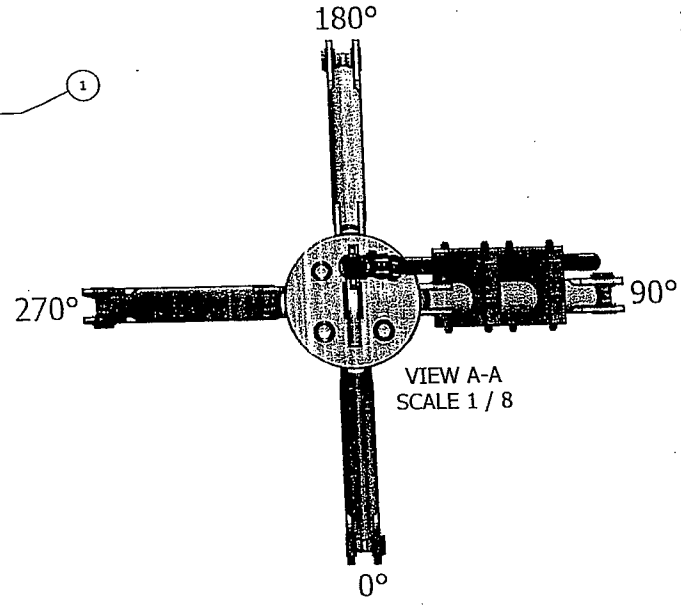

VIEW A-A
SCALE 1 / 8

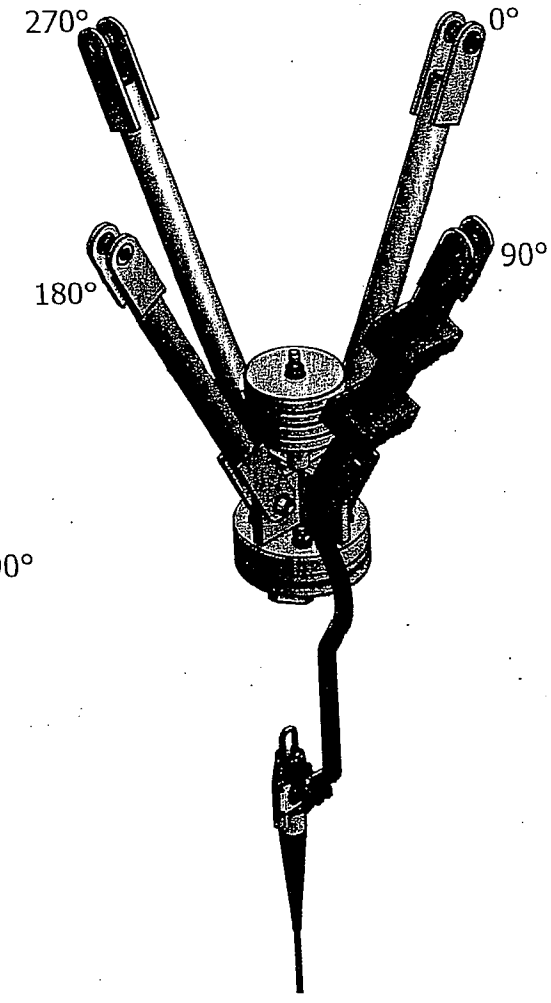

ITEM	QTY	PART NUMBER	DESCRIPTION
4	1	02.3F01314	2.3 METER BALLAST ASSEMBLY
3	1	02.3F01313	2.3 METER IM HOSE PROTECTION ASSEMBLY
2	1	02.3F01358-001	MOORING PENDANT SPACER PLATE
1	1	02.3F01301-001	2.3 METER STANDARD BUOY BASIC BRIDLE ASSEMBLY

Parts List

2.3 Meter Standard Buoy Bridle Mechanical Assembly -001
Standard Configuration

UNLESS OTHERWISE SPECIFIED:
DIMENSIONS ARE IN INCHES
TOLERANCES
DECIMALS .XX +/- .05 .XXX +/-.010
ANGULAR +/- .5
DO NOT SCALE DRAWING

DRAWN	chuckc	1/8/2008
CHECKED		
QA		
MFG		
APPROVED		

NATIONAL DATA BUOY CENTER
John C. Stennis Space Center
Stennis Space Center, Mississippi,39529

TITLE
2.3 Meter Standard Buoy Bridle Mechanical Assembly

SIZE	DWG NO	REV
C	02.3F01300	

SCALE

SHEET 1 OF 3

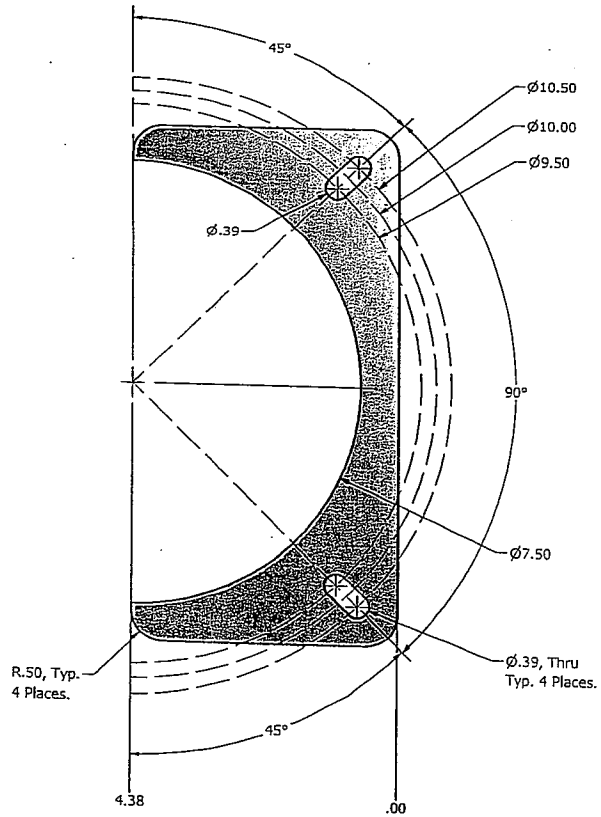

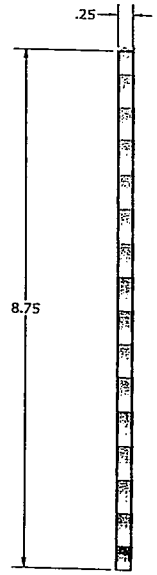

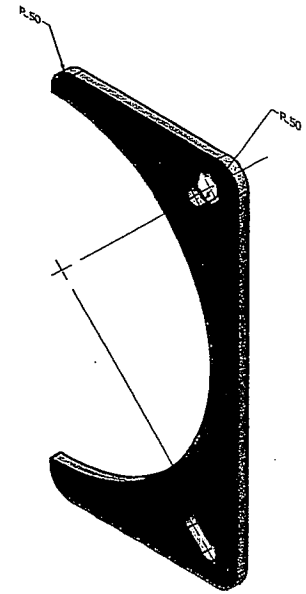

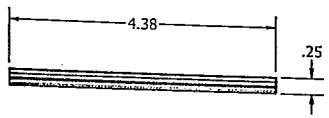

ITEM	QTY	PART NUMBER	DESCRIPTION
1	1	McMaster-Carr #8747K114	Grey PVC, 8.75 Lg. X 4.38 Wd. X .25 Thk.

Parts List

UNLESS OTHERWISE SPECIFIED:
DIMENSIONS ARE IN INCHES
TOLERANCES
DECIMALS .XX +/- .05 .XXX +/-.010
ANGULAR +/- .5
DO NOT SCALE DRAWING

DRAWN	chuckc	6/9/2008
CHECKED		
QA		
MFG		
APPROVED		

NATIONAL DATA BUOY CENTER
John C. Stennis Space Center
Stennis Space Center, Mississippi,39529

TITLE
Tube Support

SIZE C | DWG NO 02.3F01272 | REV

SCALE | SHEET 1 OF 1

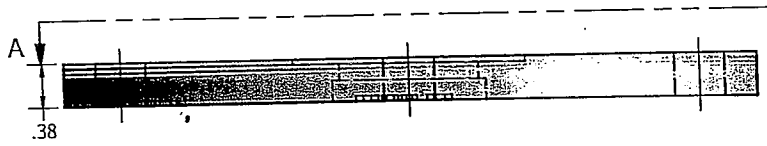

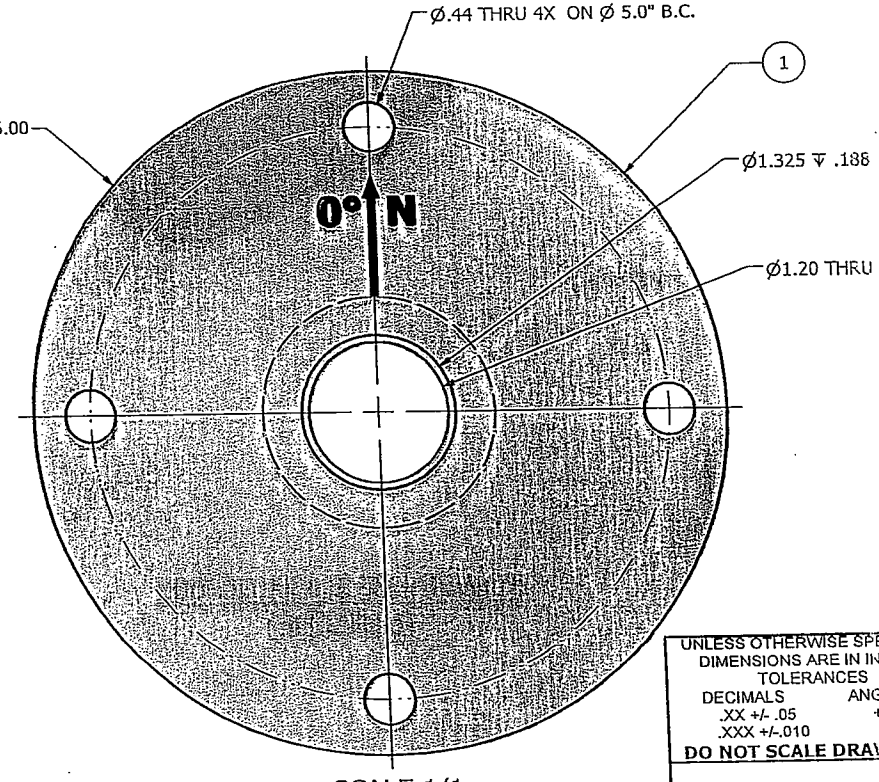

SCALE 1/1

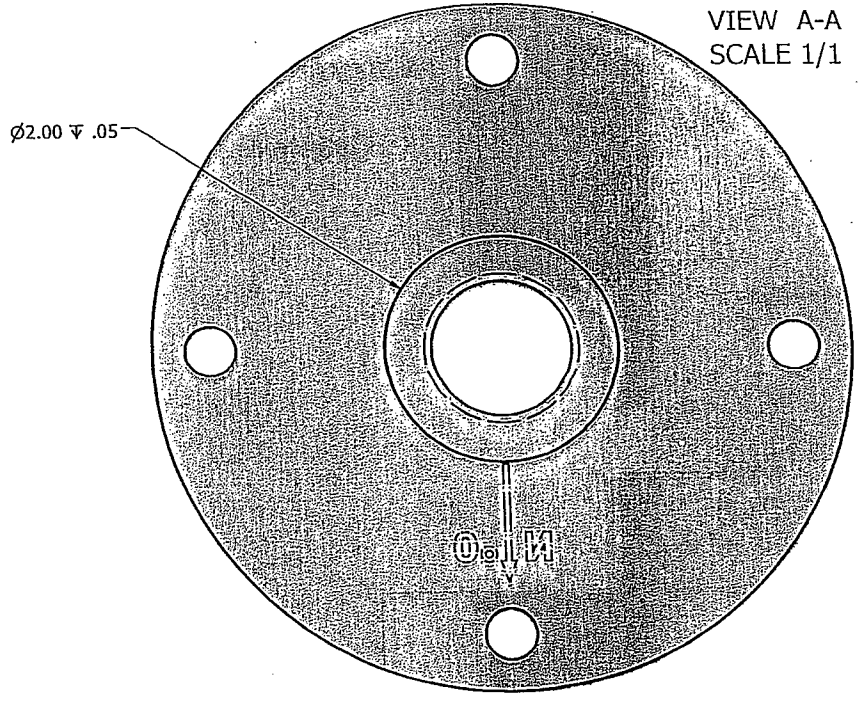

VIEW A-A
SCALE 1/1

ITEM	QTY	PART NUMBER	DESCRIPTION	MATERIAL
1	1		PLATE, .38 X 6.00 DIA.	Aluminum-6061

Parts List

UNLESS OTHERWISE SPECIFIED:
DIMENSIONS ARE IN INCHES
TOLERANCES
DECIMALS .XX +/- .05 .XXX +/-.010
ANGULAR +/- .5
DO NOT SCALE DRAWING

DRAWN	T. RUTLEDGE	10/5/2007
CHECKED		
QA		
MFG		
APPROVED		

NATIONAL DATA BUOY CENTER
John C. Stennis Space Center
Stennis Space Center, Mississippi,39529

TITLE
Wind Sensor Flange

SIZE	DWG NO	REV
B	02.3F01271	

SCALE | SHEET 1 OF 1

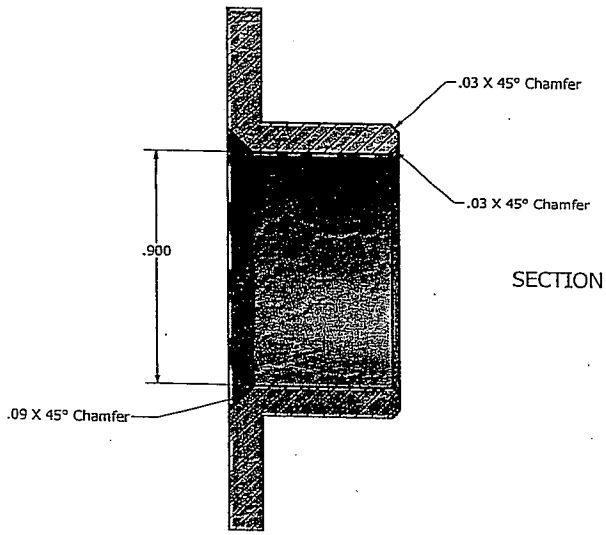

SECTION B-B

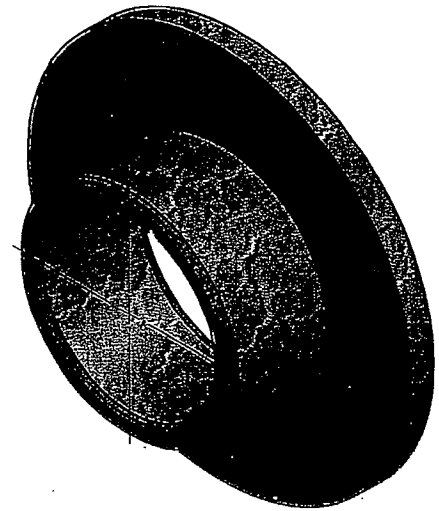

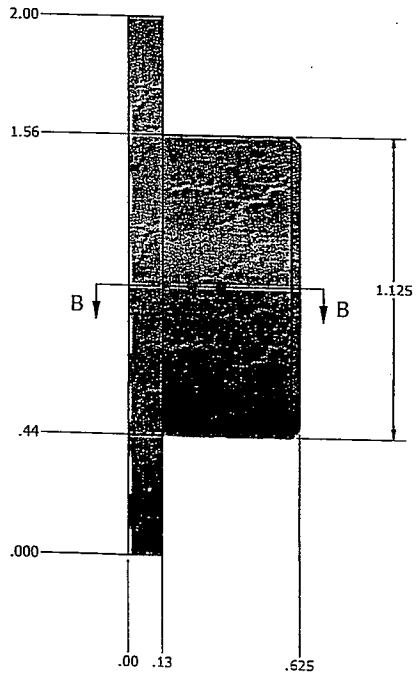

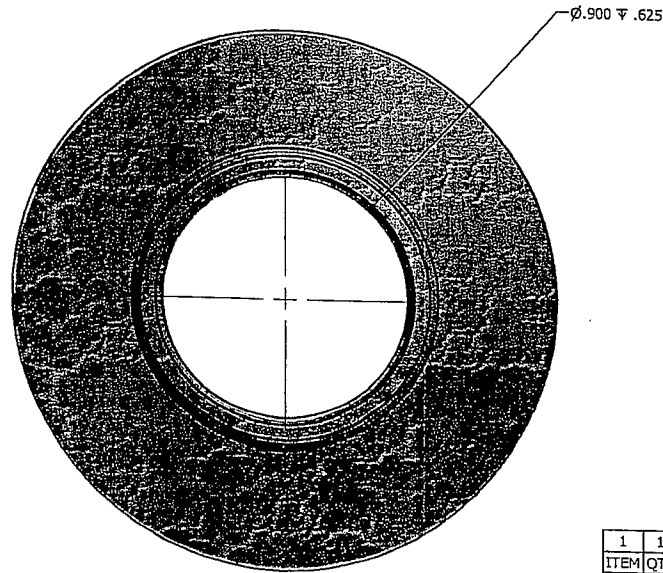

TOWER LEG BUSHING-002
(OUTSIDE)

ITEM	QTY	PART NUMBER	DESCRIPTION
1	1	TBD	BAR, ROUND, 2.0" Dia. x .625" Lg. Carbon Impregnated Plastic (CIP)

Parts List

UNLESS OTHERWISE SPECIFIED:
DIMENSIONS ARE IN INCHES
TOLERANCES
DECIMALS .XX +/- .05 .XXX +/-.010
ANGULAR +/- .5
DO NOT SCALE DRAWING

DRAWN	chuckc	1/24/2008
CHECKED		
QA		
MFG		
APPROVED		

NATIONAL DATA BUOY CENTER
John C. Stennis Space Center
Stennis Space Center, Mississippi,39529

TITLE
TOWER LEG BUSHINGS IN & OUT

SIZE	DWG NO	REV
C	02.3F01270	

SCALE

SHEET 2 OF 2

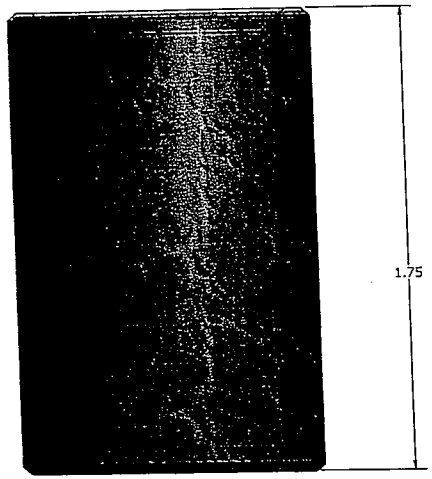

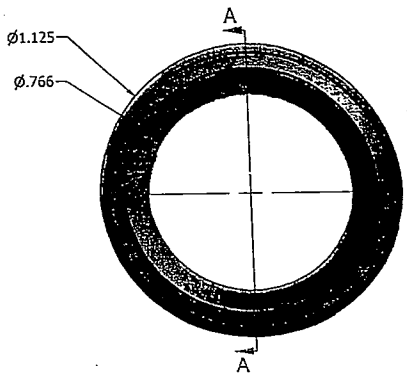

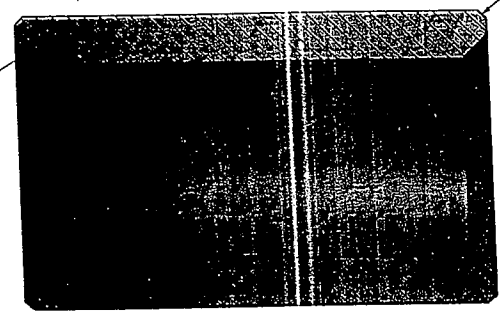

TOWER LEG BUSHING-001
(INSIDE)

ITEM	QTY	PART NUMBER	DESCRIPTION
1	1	TBD	BAR, ROUND, 1.125" DA CARBON IMPREGNATED PLASTIC (CIP), 1.75" LONG, ALL PLASTICS & FIBERGLASS INC.

Parts List

UNLESS OTHERWISE SPECIFIED:
DIMENSIONS ARE IN INCHES
TOLERANCES
DECIMALS .XX +/- .05 .XXX +/-.010
ANGULAR +/- .5
DO NOT SCALE DRAWING

DRAWN	chuckc	1/24/2008
CHECKED		
QA		
MFG		
APPROVED		

NATIONAL DATA BUOY CENTER
John C. Stennis Space Center
Stennis Space Center, Mississippi,39529

TITLE
TOWER LEG BUSHINGS IN & OUT

SIZE C | DWG NO 02.3F01270 | REV

SCALE | SHEET 1 OF 2

NOTES:

1. EACH COUPLING, ITEM 1, WILL PRODUCE TWO SPLIT COUPLERS AFTER CUTTING. THE 0.91 DIMENSION IS FOR REFERENCE ONLY. ACTUAL SPLIT COUPLER LENGTH MAY VARY BASED ON KERF OF CUTTING TOOL.

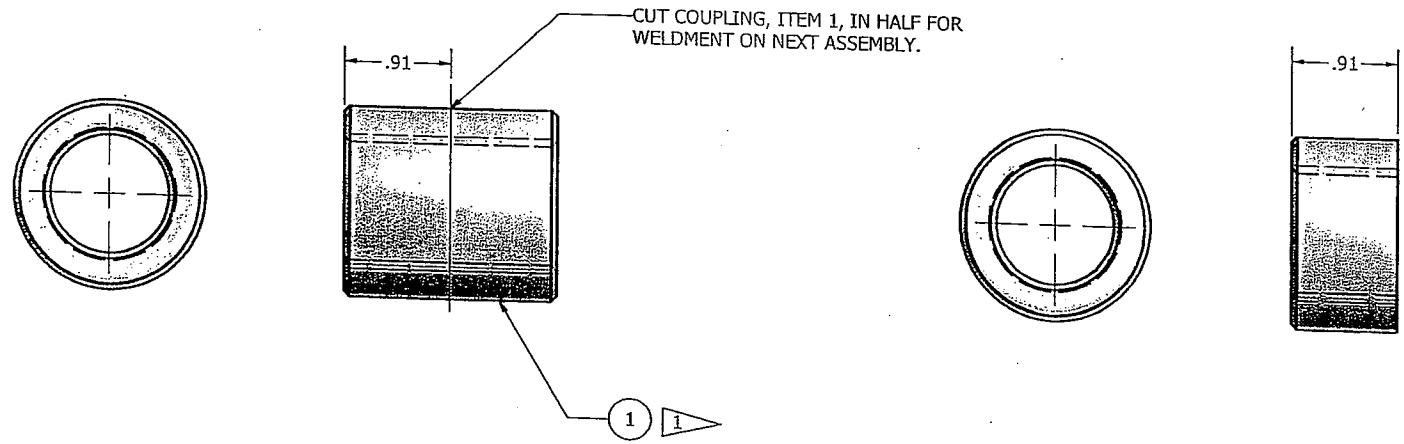

ITEM	QTY	PART NUMBER	DESCRIPTION	MATERIAL
1	1	NDBC CTRL# 643	COUPLING, 1.0' ALUM SCH 40 INSIDE THREADED	Aluminum-606

Parts List

UNLESS OTHERWISE SPECIFIED:
DIMENSIONS ARE IN INCHES
TOLERANCES
DECIMALS .XX +/- .05 .XXX +/-.010
ANGULAR +/- .5
DO NOT SCALE DRAWING

DRAWN	chuckc	11/6/2007
CHECKED		
QA		
MFG		
APPROVED		

NATIONAL DATA BUOY CENTER
John C. Stennis Space Center
Stennis Space Center, Mississippi,39529

TITLE
SPLIT COUPLER

SIZE B | DWG NO 02.3F01269 | REV

SCALE | SHEET 1 OF 1

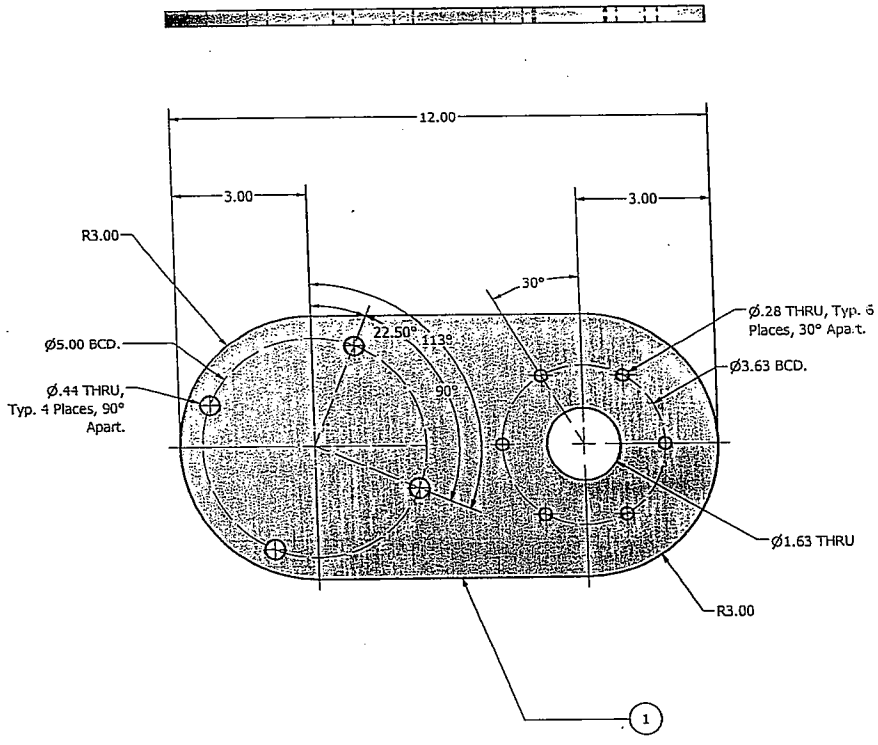

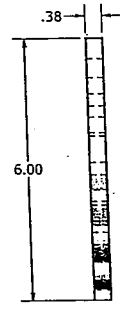

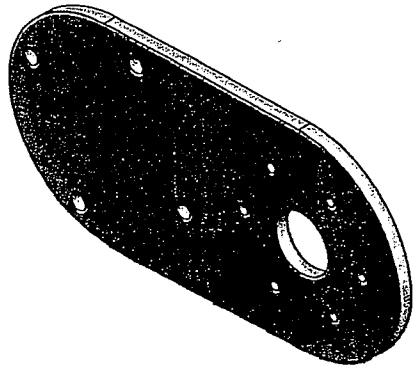

ISOMETRIC VIEW

ITEM	QTY	PART NUMBER	DESCRIPTION	MATERIAL
1	1	NDBC CTRL # 613	PLATE,0.38' THK X 6.00 X 12.00	Aluminum-6061

Parts List

UNLESS OTHERWISE SPECIFIED:
DIMENSIONS ARE IN INCHES
TOLERANCES
DECIMALS .XX +/- .05 .XXX +/-.010
ANGULAR +/- .5
DO NOT SCALE DRAWING

DRAWN chuckc 10/18/2007
CHECKED
QA
MFG
APPROVED

NATIONAL DATA BUOY CENTER
John C. Stennis Space Center
Stennis Space Center, Mississippi,39529

TITLE
RF ANTENNA MOUNTING FLANGE

SIZE C
DWG NO 02.3F01268
REV
SCALE
SHEET 1 OF 1

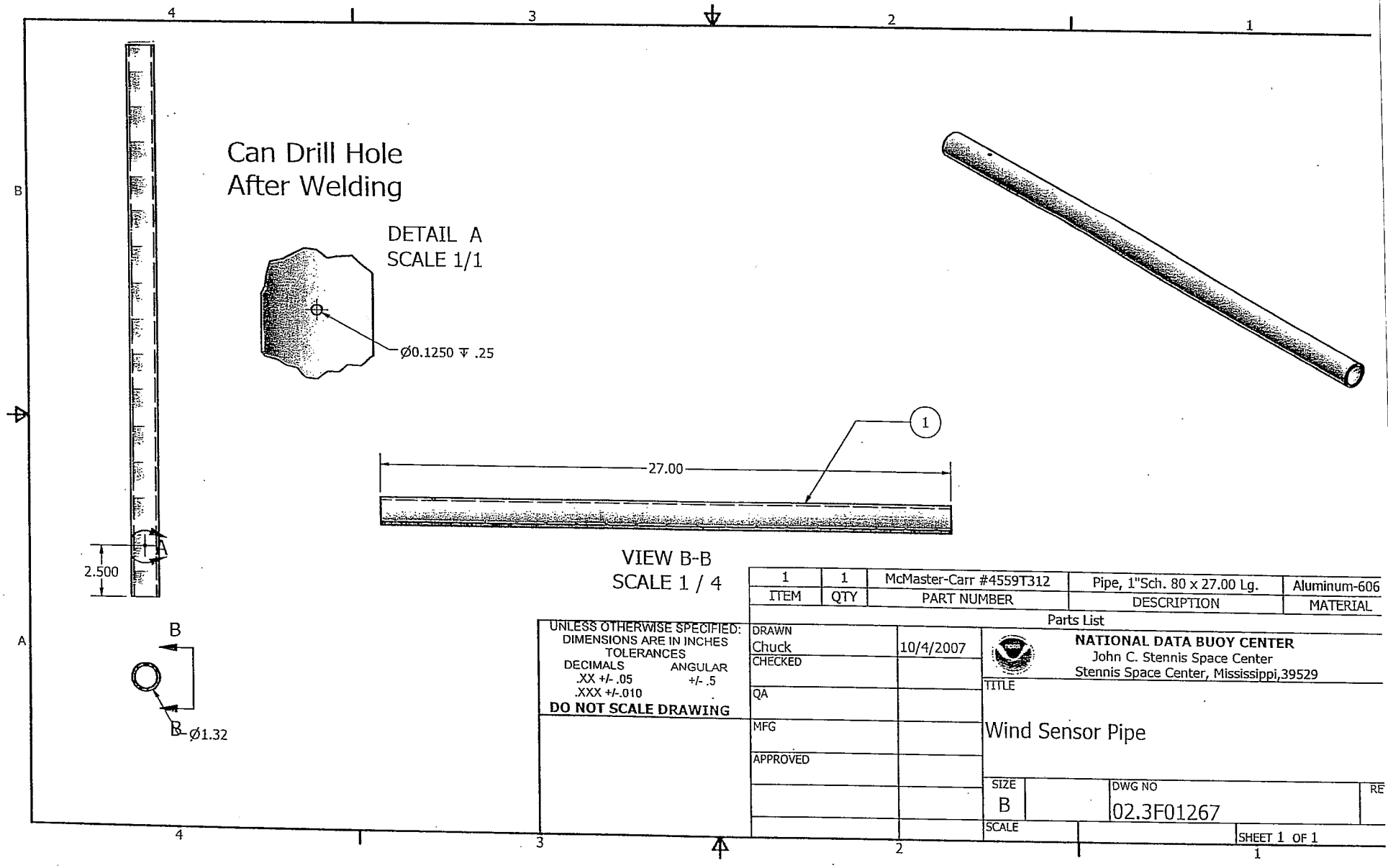
Can Drill Hole
After Welding
DETAIL A
SCALE 1/1
Ø0.1250 ↧ .25
27.00
1
2.500
A
B
B
Ø1.32
VIEW B-B
SCALE 1 / 4
UNLESS OTHERWISE SPECIFIED:
DIMENSIONS ARE IN INCHES
TOLERANCES
DECIMALS
.XX +/- .05
.XXX +/-.010
ANGULAR
+/- .5
DO NOT SCALE DRAWING
ITEM
QTY
PART NUMBER
DESCRIPTION
MATERIAL
1
1
McMaster-Carr #4559T312
Pipe, 1"Sch. 80 x 27.00 Lg.
Aluminum-606
Parts List
DRAWN
Chuck
10/4/2007
CHECKED
QA
MFG
APPROVED
NATIONAL DATA BUOY CENTER
John C. Stennis Space Center
Stennis Space Center, Mississippi,39529
TITLE
Wind Sensor Pipe
SIZE
B
DWG NO
02.3F01267
SCALE
SHEET 1 OF 1

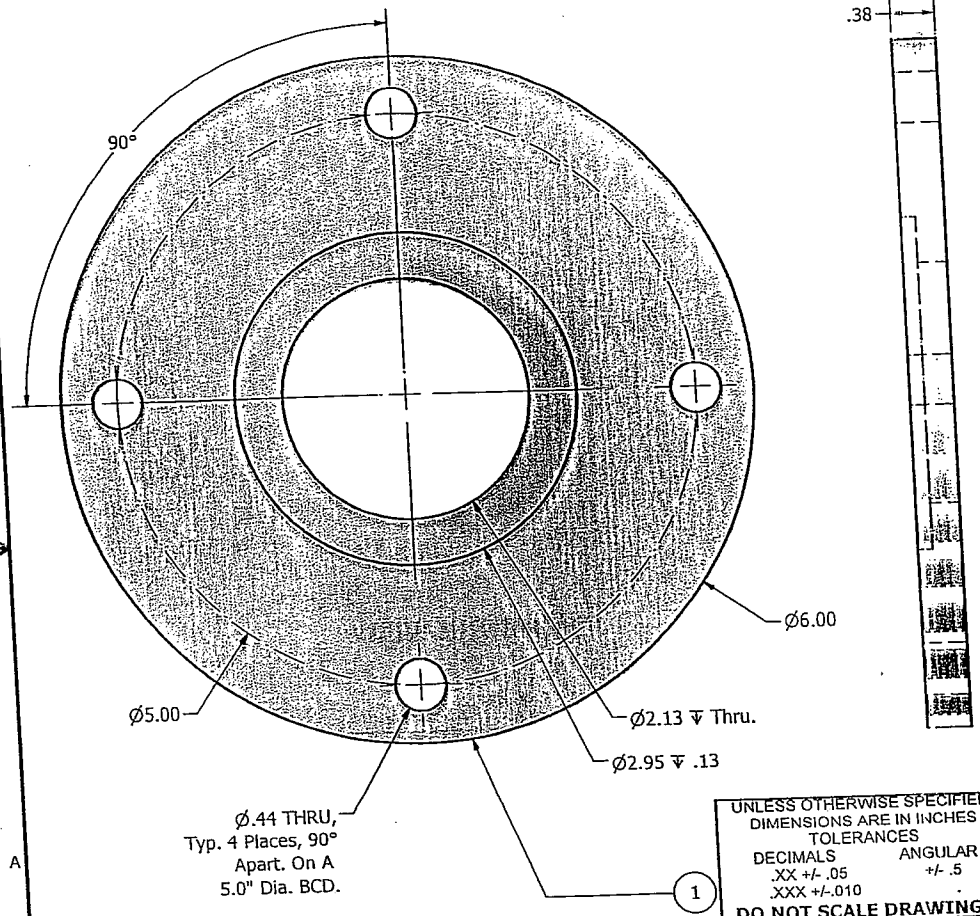

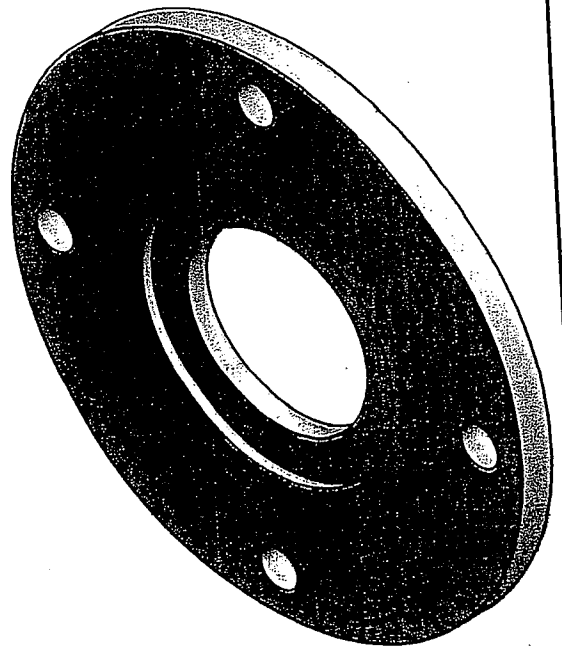

CUT 8" X 8" For CNC Mounting

ITEM	QTY	PART NUMBER	DESCRIPTION	MATERIAL
1	1	NDBC CTRL # 613	PLATE, 0.38" THK. X 6.0" DIA.	Aluminum-6061

Parts List

UNLESS OTHERWISE SPECIFIED:
DIMENSIONS ARE IN INCHES
TOLERANCES
DECIMALS .XX +/- .05 .XXX +/-.010
ANGULAR +/- .5
DO NOT SCALE DRAWING

DRAWN	chuckc	10/5/2007
CHECKED		
QA		
MFG		
APPROVED		

NATIONAL DATA BUOY CENTER
John C. Stennis Space Center
Stennis Space Center, Mississippi,39529

TITLE
SENSOR MOUNTING FLANGE

SIZE	DWG NO	REV
B	02.3F01266	

SCALE

SHEET 1 OF 1

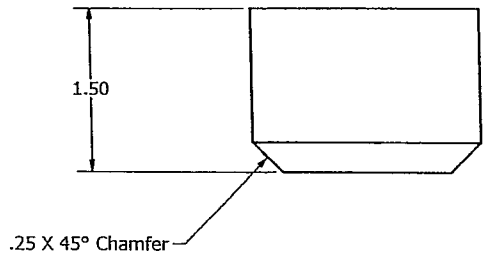

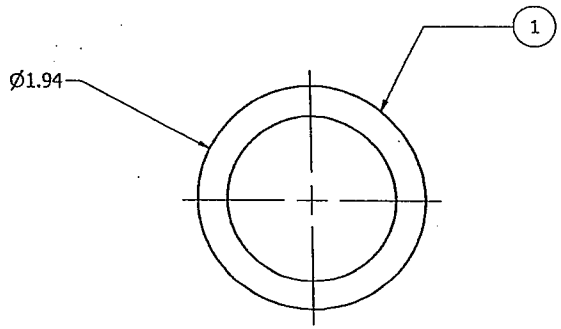

SCALE 1 : 1

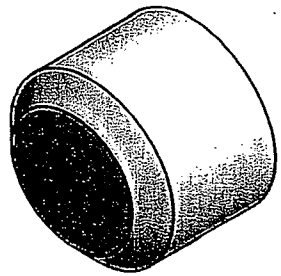

ISOMETRIC VIEW

ITEM	QTY	PART NUMBER	DESCRIPTION	MATERIAL
1	1		1.94 DIA X 1.50 LG.	Aluminum-6061

Parts List

UNLESS OTHERWISE SPECIFIED:
DIMENSIONS ARE IN INCHES
TOLERANCES
DECIMALS .XX +/- .05 .XXX +/-.010
ANGULAR +/- .5
DO NOT SCALE DRAWING

DRAWN	T. RUTLEDGE	10/5/2007
CHECKED		
QA		
MFG		
APPROVED		

NATIONAL DATA BUOY CENTER
John C. Stennis Space Center
Stennis Space Center, Mississippi,39529

TITLE
SENSOR MOUNT DOWEL

SIZE	DWG NO	REV
B	02.3F01265	

SCALE

SHEET 1 OF 1

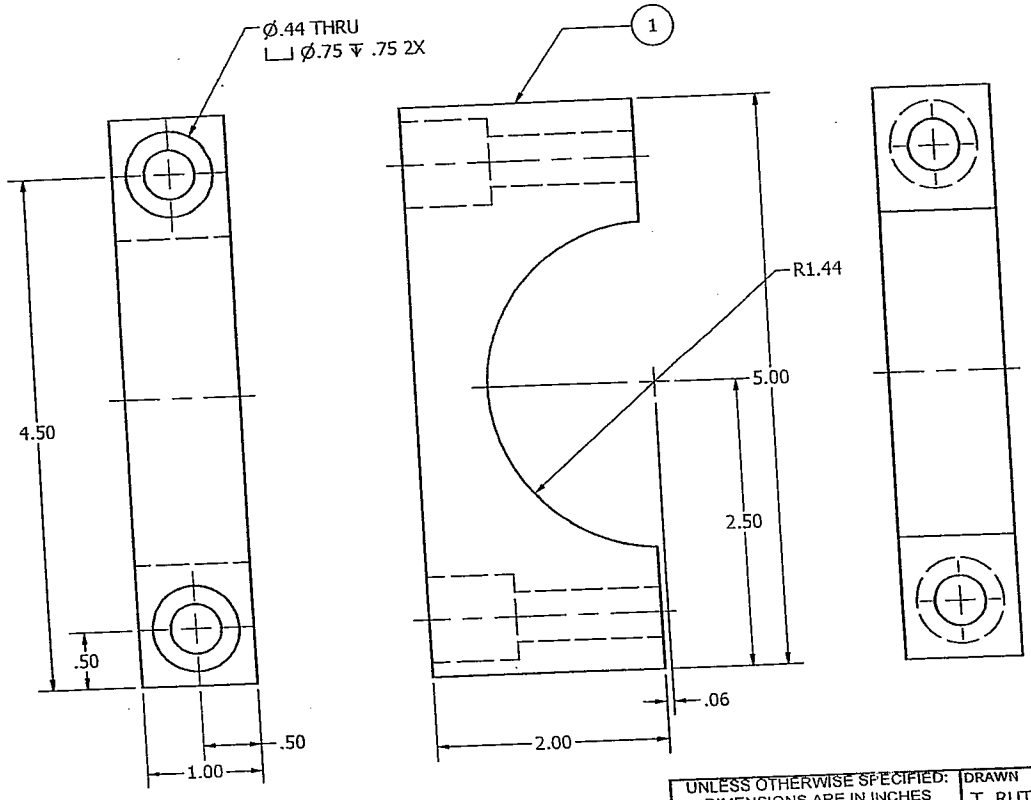

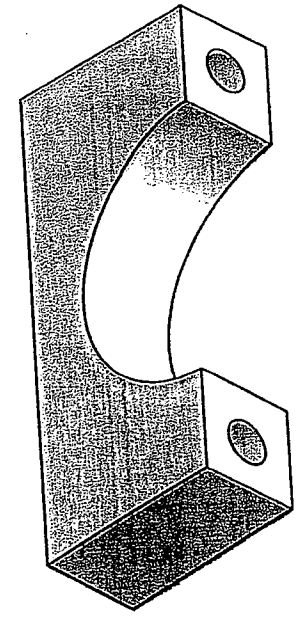

ISOMETRIC VIEW

VENT CLAMP BRACE -003
Large End
SCALE 1 : 1

ITEM	QTY	PART NUMBER	DESCRIPTION
1	1	TBD	Sheet, 1.00 x 2.00 x 5.00

Parts List

UNLESS OTHERWISE SPECIFIED:
DIMENSIONS ARE IN INCHES
TOLERANCES
DECIMALS .XX +/- .05 .XXX +/-.010
ANGULAR +/- .5
DO NOT SCALE DRAWING

DRAWN	T. RUTLEDGE	10/24/2007
CHECKED		
QA		
MFG		
APPROVED		

NATIONAL DATA BUOY CENTER
John C. Stennis Space Center
Stennis Space Center, Mississippi,39529

TITLE
VENT CLAMP BRACE

SIZE	DWG NO	REV
B	02.3F01264	

SCALE | SHEET 3 OF 3

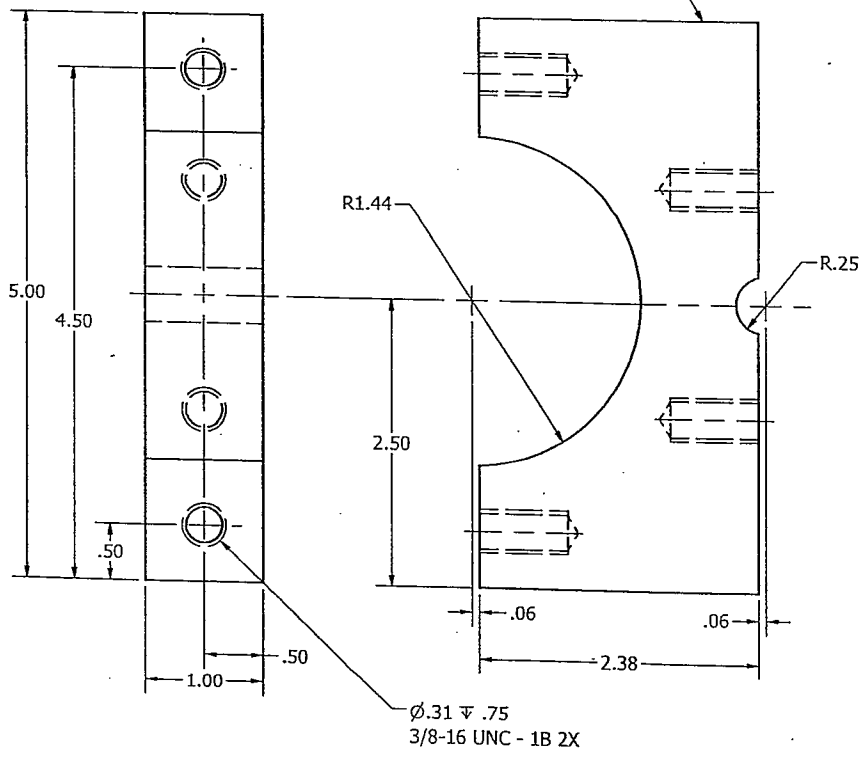

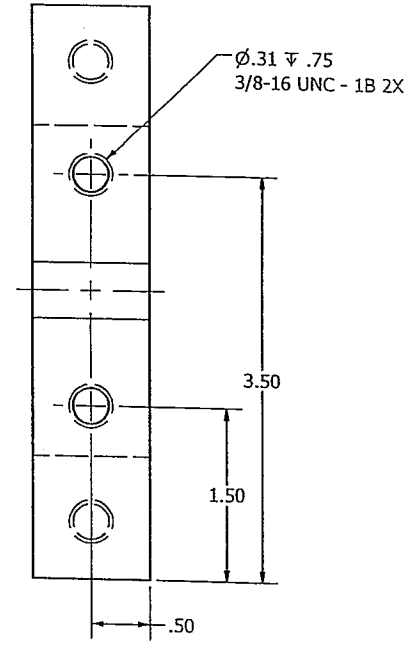

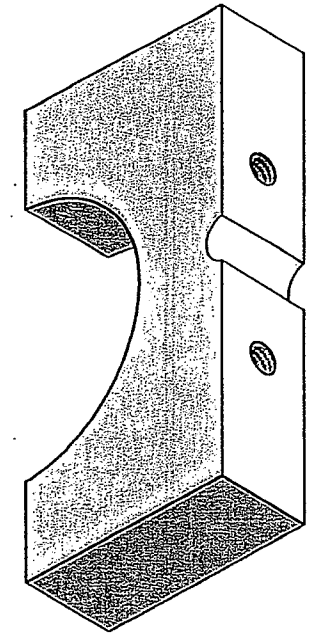

ISOMETRIC VIEW

VENT CLAMP BRACE -002
Center
SCALE 1 : 1

ITEM	QTY	PART NUMBER	DESCRIPTION
1	1	TBD	Sheet, 1.00 x 2.38 x 5.00

Parts List

UNLESS OTHERWISE SPECIFIED:
DIMENSIONS ARE IN INCHES
TOLERANCES
DECIMALS .XX +/- .05 .XXX +/-.010
ANGULAR +/- .5
DO NOT SCALE DRAWING

DRAWN	T. RUTLEDGE	10/24/2007
CHECKED		
QA		
MFG		
APPROVED		

NATIONAL DATA BUOY CENTER
John C. Stennis Space Center
Stennis Space Center, Mississippi,39529

TITLE
VENT CLAMP BRACE

SIZE B | DWG NO 02.3F01264 | REV
SCALE | SHEET 2 OF 3

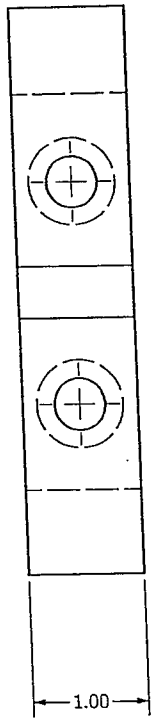

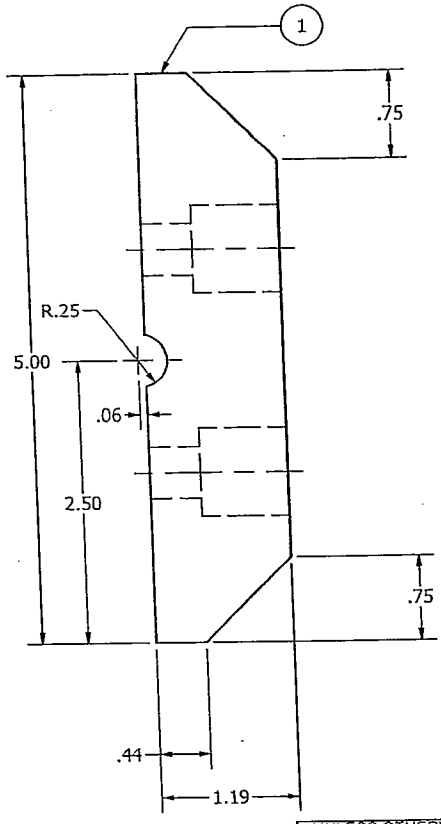

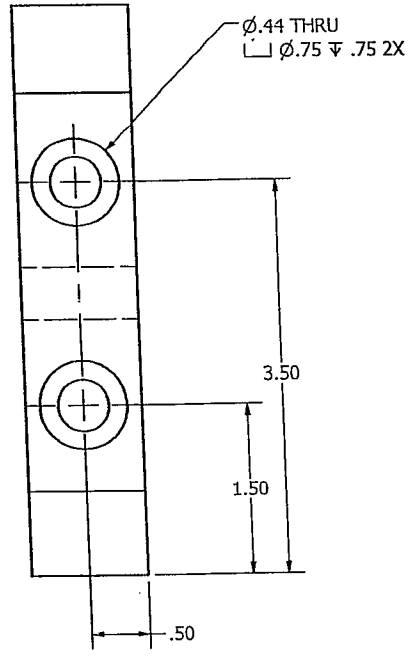

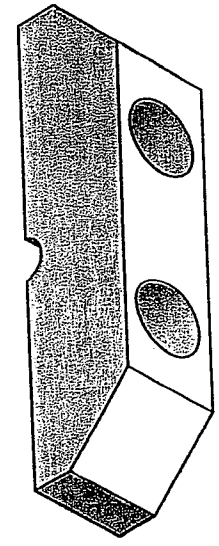

ISOMETRIC VIEW

VENT CLAMP BRACE -001
Small End
SCALE 1:1

ITEM	QTY	PART NUMBER	DESCRIPTION	MATERIAL
1	1	TBD	Sheet, 1.00 x 1.19 x 5.00	UHMW, White

Parts List

UNLESS OTHERWISE SPECIFIED:
DIMENSIONS ARE IN INCHES
TOLERANCES
DECIMALS .XX +/- .05 .XXX +/-.010
ANGULAR +/- .5
DO NOT SCALE DRAWING

DRAWN	T. RUTLEDGE	10/24/2007
CHECKED		
QA		
MFG		
APPROVED		

NATIONAL DATA BUOY CENTER
John C. Stennis Space Center
Stennis Space Center, Mississippi,39529

TITLE
VENT CLAMP BRACE

SIZE	DWG NO	REV
B	02.3F01264	

SCALE

SHEET 1 OF 3

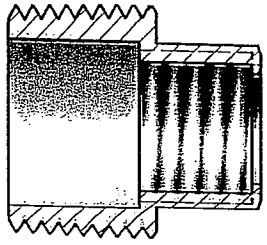

SECTION A-A
SCALE 2/1

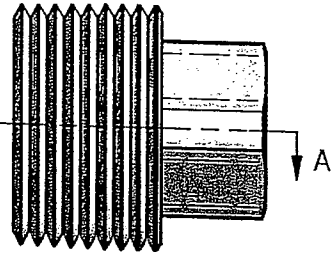

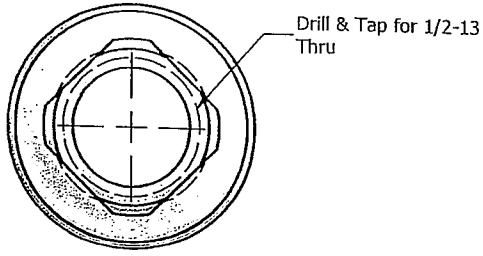

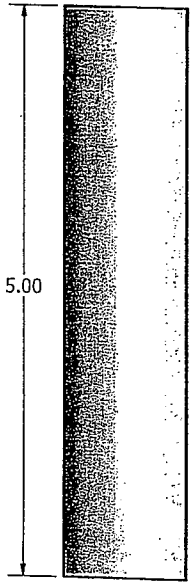

VIEW7
SCALE 1/1

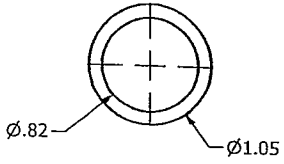

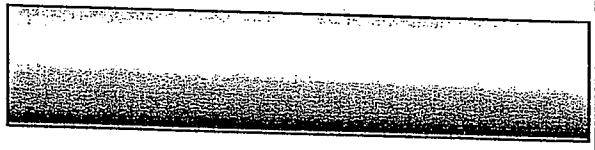

UNLESS OTHERWISE SPECIFIED:
DIMENSIONS ARE IN INCHES
TOLERANCES

DECIMALS	ANGULAR
.XX +/- .05	+/- .5
.XXX +/-.010	

DO NOT SCALE DRAWING

DRAWN	chuckc	10/24/2007
CHECKED		
QA		
MFG		
APPROVED		

NATIONAL DATA BUOY CENTER
John C. Stennis Space Center
Stennis Space Center, Mississippi,39529

TITLE

VENT TUBE ASSEMBLY

SIZE	DWG NO	REV
B	02.3F01263	

SCALE

SHEET 3 OF 3

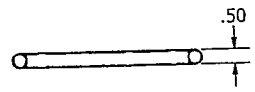

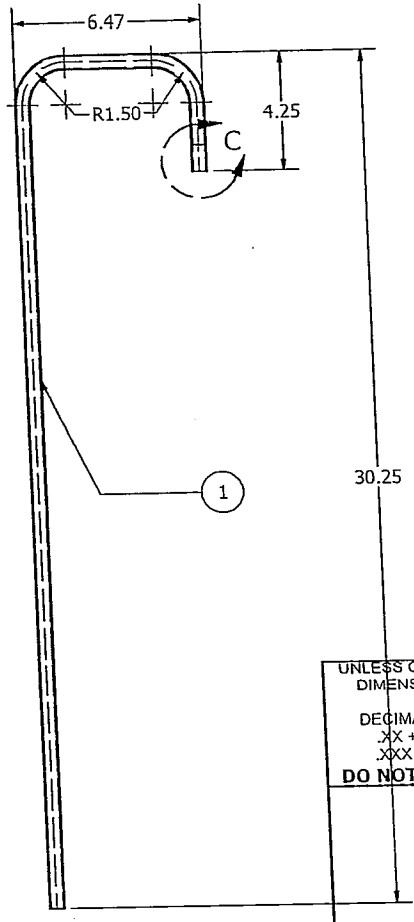

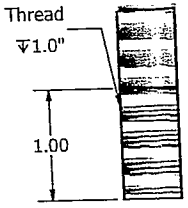

DETAIL C
SCALE 1/1

NOTE:

Buy McMaster-Carr Pt# 33745A62
Tube Bender Hard Metals,
1/2" Tube OD, 1-1/2" Bend Radius
To Make This Bend.

ISOMETRIC VIEW

ITEM	QTY	PART NUMBER	DESCRIPTION	MATERIAL
1	1	McMaster-Carr - 89785K55	1/2" SST. Tubing, .43" ID	316 Stainless Steel

Parts List

UNLESS OTHERWISE SPECIFIED:
DIMENSIONS ARE IN INCHES
TOLERANCES
DECIMALS .XX +/- .05 .XXX +/-.010
ANGULAR +/- .5
DO NOT SCALE DRAWING

DRAWN	chuckc	10/24/2007
CHECKED		
QA		
MFG		
APPROVED		

NATIONAL DATA BUOY CENTER
John C. Stennis Space Center
Stennis Space Center, Mississippi,39529

TITLE

VENT TUBE ASSEMBLY

SIZE	DWG NO	REV
B	02.3F01263	

SCALE 1 / 4

SCALE

SHEET 2 OF 3

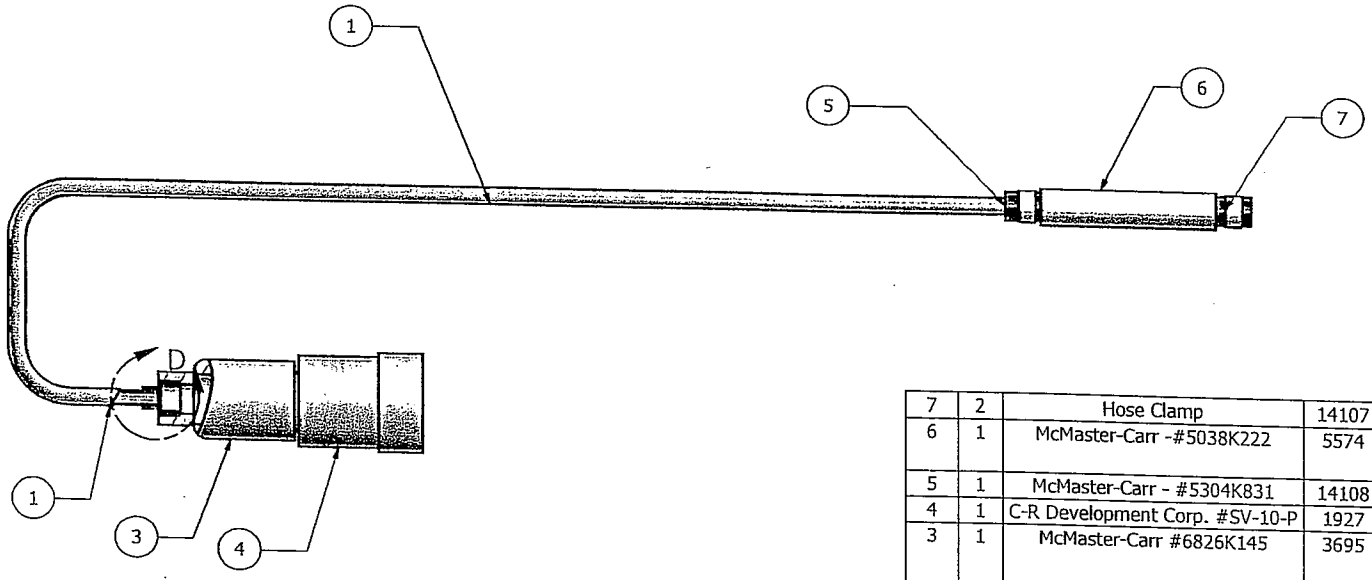

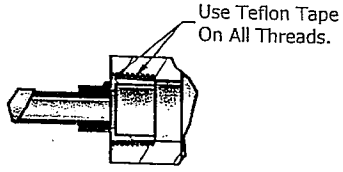

DETAIL D
SCALE 0.60 : 1

ITEM	QTY	PART NUMBER	Contrl.#	DESCRIPTION	MATERIAL
7	2	Hose Clamp	14107	5/8 Hose Clamp, Stainless	Stainless Steel
6	1	McMaster-Carr -#5038K222	5574	Alloy 6061,Pipe 1.05" OD, .824" ID, .113" Wall	Aluminum
5	1	McMaster-Carr - #5304K831	14108	Hose For Vent Connection	Stainless Steel
4	1	C-R Development Corp. #SV-10-P	1927	PVC Vent	PVC
3	1	McMaster-Carr #6826K145	3695	CPVCPipe Fitting 1-1/4" X 3/4" Pipe, Reducer, Schedule 80	PVC
2	1	McMaster-Carr-#4452K125	NSN	Plug, 316SS Threaded Pipe Fitting 3/4" Pipe Size, Square Head Plug	Stainless Steel
1	1	02.3F01263-Sht. 2	8428	Vent Tube	Stainless Steel

Parts List

UNLESS OTHERWISE SPECIFIED:
DIMENSIONS ARE IN INCHES
TOLERANCES
DECIMALS .XX +/- .05 .XXX +/-.010
ANGULAR +/- .5
DO NOT SCALE DRAWING

DRAWN	chuckc	10/24/2007
CHECKED		
QA		
MFG		
APPROVED		

NATIONAL DATA BUOY CENTER
John C. Stennis Space Center
Stennis Space Center, Mississippi,39529

TITLE
VENT TUBE ASSEMBLY

SIZE B | DWG NO 02.3F01263 | REV

SCALE | SHEET 1 OF 3

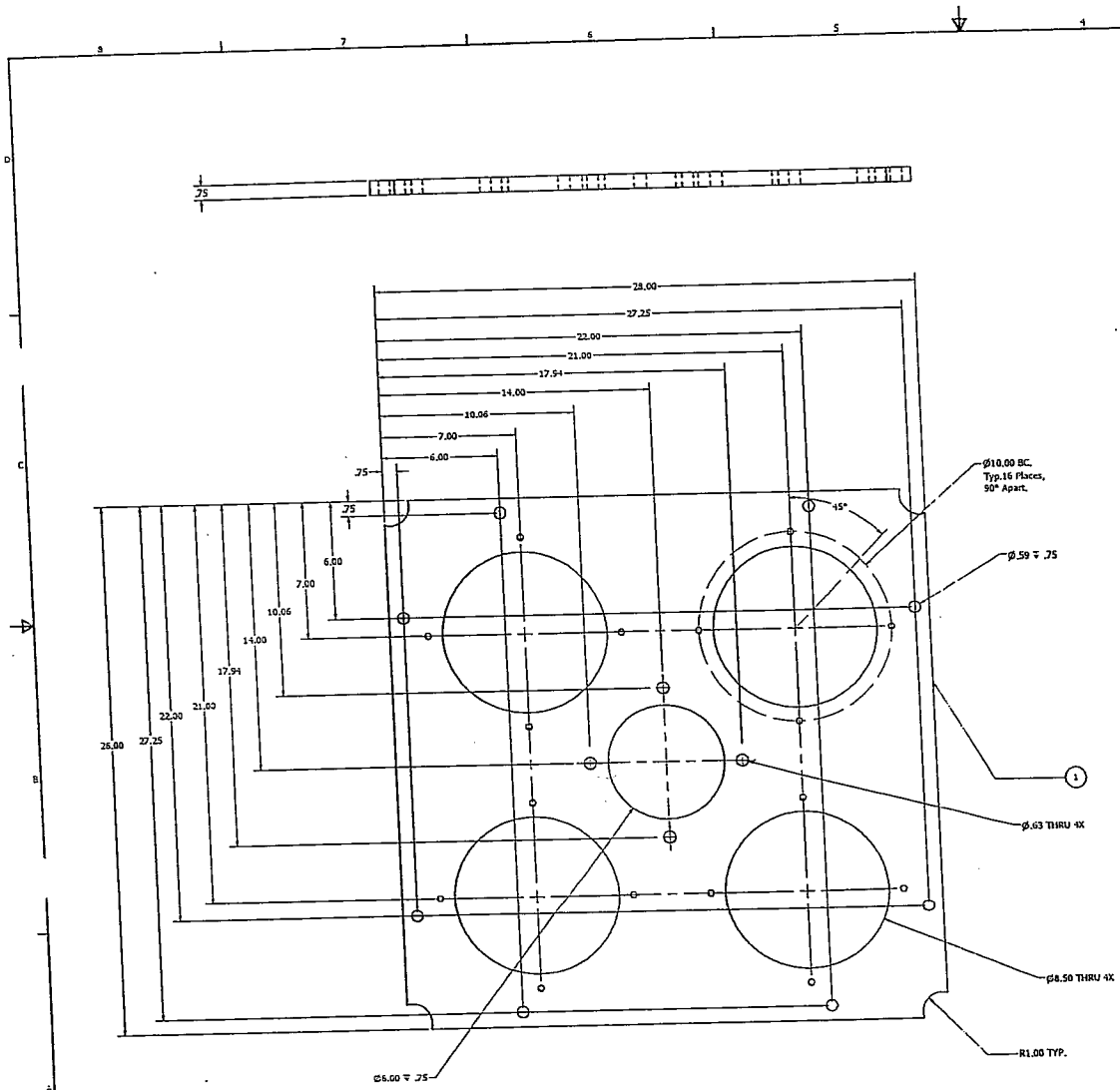

TOWER SHELF- UPPER - 002

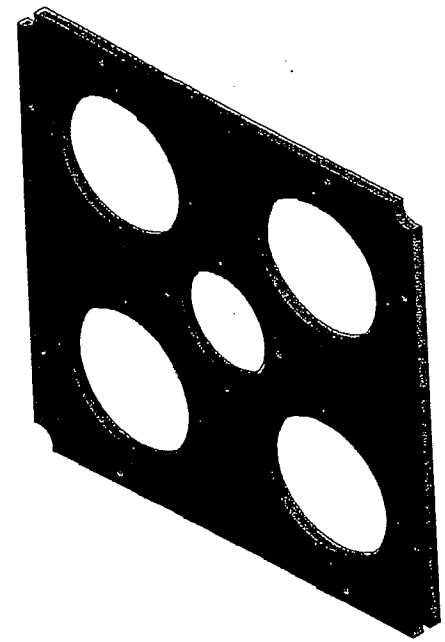

ISOMETRIC VIEW

ITEM	QTY	PART NUMBER	DESCRIPTION	MATERIAL
1	1		Plate, .75 X 28.00 X 28.00	Extren

Parts List

UNLESS OTHERWISE SPECIFIED, DIMENSIONS ARE IN INCHES
TOLERANCES
DECIMALS XX ±.05 XXX ±.010
ANGULAR ±.5
DO NOT SCALE DRAWING

DRAWN T. RUTLEDGE	10/5/2007	NATIONAL DATA BUOY CENTER John C. Stennis Space Center Stennis Space Center, Mississippi 39529
CHECKED		TITLE
QA		TOWER SHELF
MFG		
APPROVED		SIZE D / DWG NO 02.3F01262 / REV
		SCALE / SHEET 2 OF 2

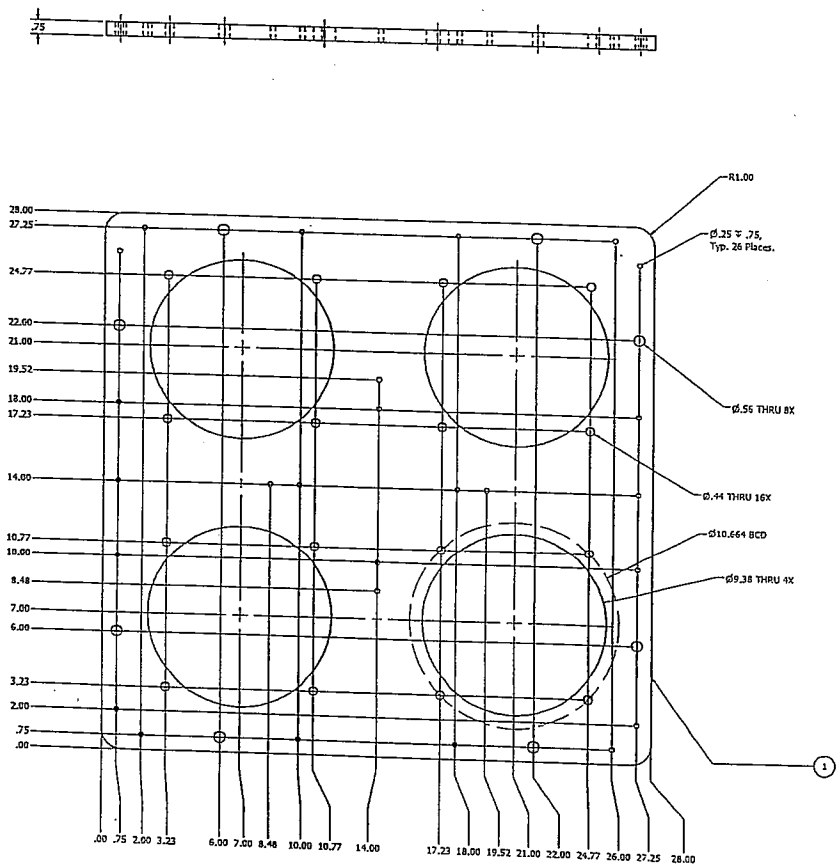

TOWER SHELF - LOWER -001

SCALE 1/3

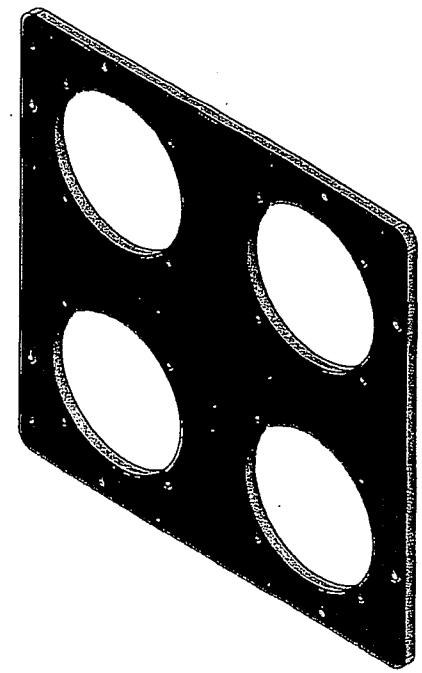

ISOMETRIC VIEW

ITEM	QTY	PART NUMBER	DESCRIPTION	MATERIAL
1	1		PLATE, .75 X 28.00 X 28.00	Extren

Parts List

UNLESS OTHERWISE SPECIFIED DIMENSIONS ARE IN INCHES
TOLERANCES
DECIMALS .XX +/-.05 .XXX +/-.010
ANGULAR +/- .5
DO NOT SCALE DRAWING

DRAWN T. RUTLEDGE 10/5/2007
CHECKED
QA
MFG
APPROVED

NATIONAL DATA BUOY CENTER
John C. Stennis Space Center
Stennis Space Center, Mississippi 39529

TITLE
TOWER SHELF

SIZE D
DWG NO 02.3F01262
REV
SCALE
SHEET 1 OF 2

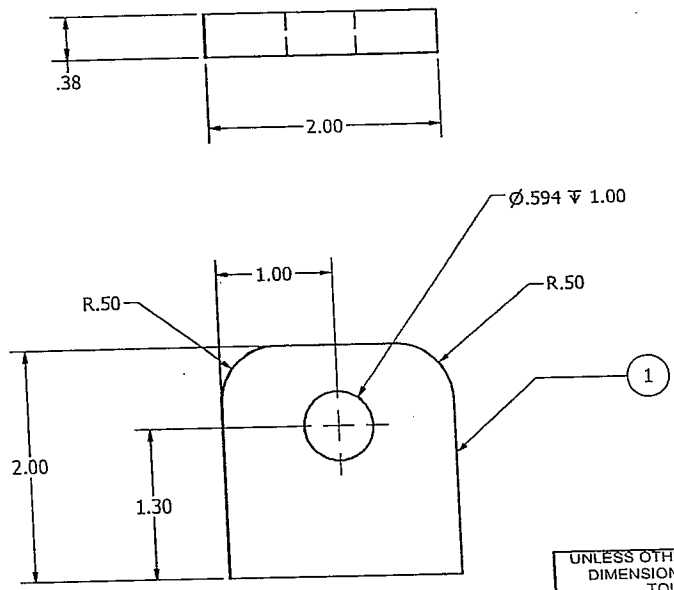

SCALE 1 : 1

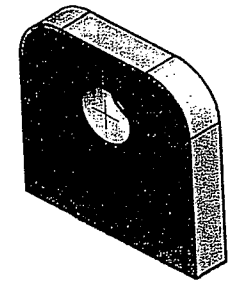

ISOMETRIC VIEW

ITEM	QTY	PART NUMBER	DESCRIPTION	MATERIAL
1	1	Tower Platform Mounting Tab	PLATE, .38 X 2.00 X 2.00	Aluminum-6061

Parts List

UNLESS OTHERWISE SPECIFIED:
DIMENSIONS ARE IN INCHES
TOLERANCES
DECIMALS .XX +/- .05 .XXX +/-.010
ANGULAR +/- .5
DO NOT SCALE DRAWING

DRAWN	T. RUTLEDGE	10/5/2007
CHECKED		
QA		
MFG		
APPROVED		

NATIONAL DATA BUOY CENTER
John C. Stennis Space Center
Stennis Space Center, Mississippi,39529

TITLE

TOWER PLATFORM MOUNTING TAB

SIZE	DWG NO	REV
B	02.3F01261	

SCALE

SHEET 1 OF 1

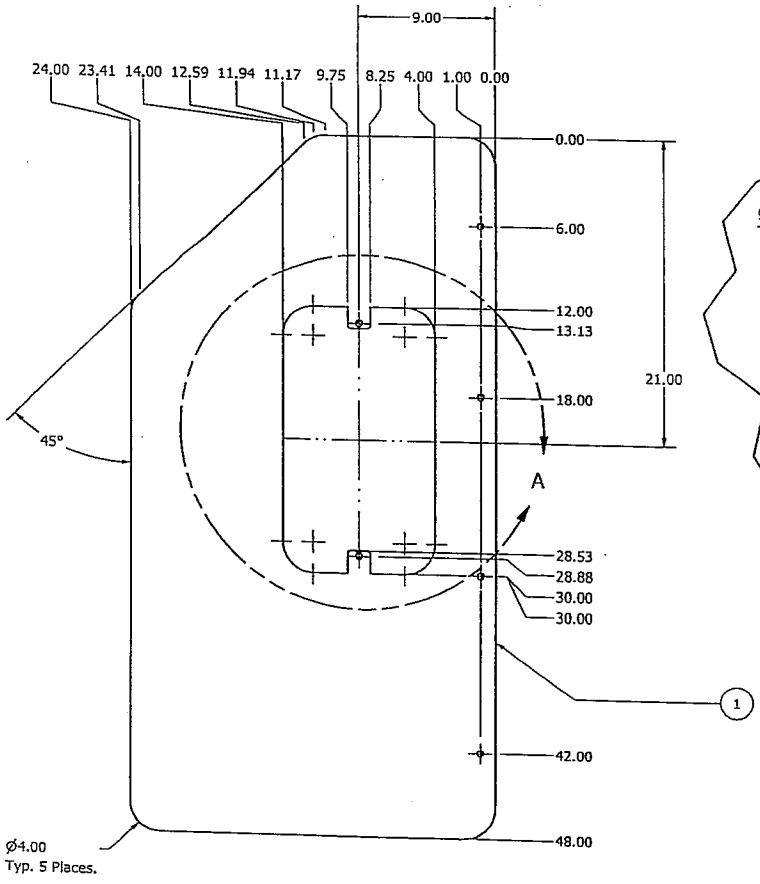

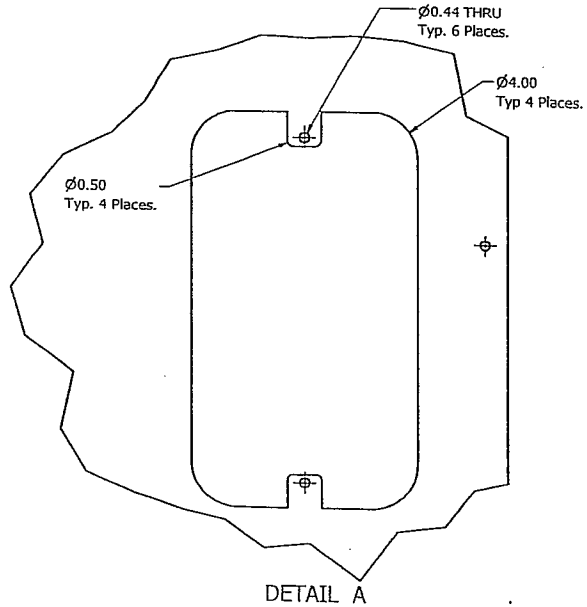

DETAIL A
SCALE 1/4

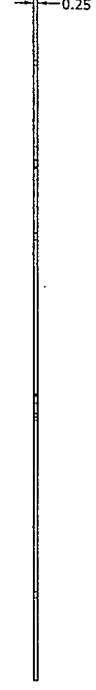

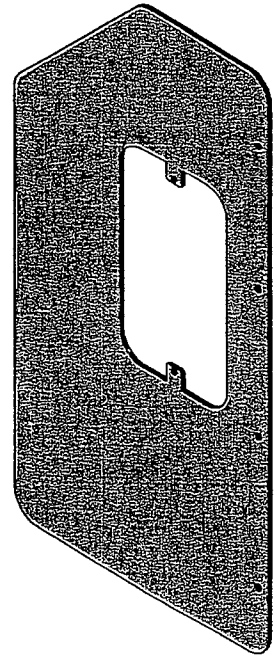

WIND FIN -001

UNLESS OTHERWISE SPECIFIED:
DIMENSIONS ARE IN INCHES
TOLERANCES
DECIMALS .XX +/- .05 .XXX +/-.010
ANGULAR +/- .5
DO NOT SCALE DRAWING

ITEM	QTY	PART NUMBER	DESCRIPTION	MATERIAL
1	1	Wind Fin	Plate, .25 x24.00 x 48.00 Lg.	Powder Coated Aluminum

Parts List

DRAWN	Chuck	10/4/2007
CHECKED		
QA		
MFG		
APPROVED		

NATIONAL DATA BUOY CENTER
John C. Stennis Space Center
Stennis Space Center, Mississippi,39529

TITLE
Wind Fin

SIZE	DWG NO	REV
C	02.3F01260	0

SCALE

SHEET 1 OF 1

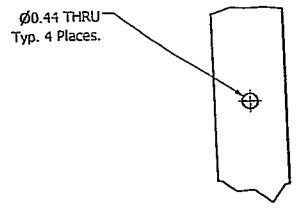

DETAIL A
SCALE 0.40 : 1

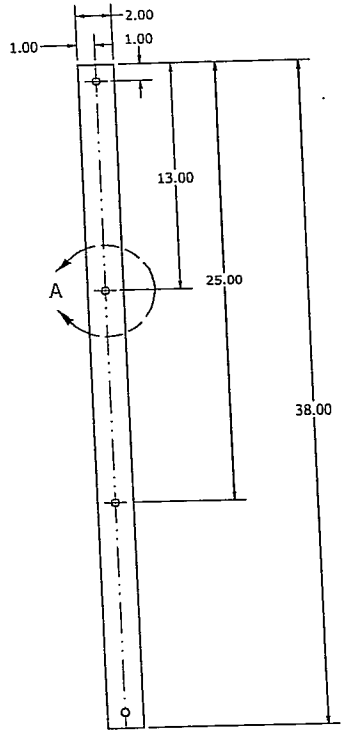

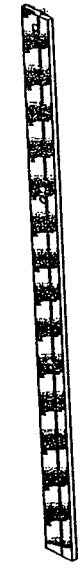

ITEM	QTY	PART NUMBER	DESCRIPTION	MATERIAL
1	1	Wind Fin Bracket	Flat Bar, .38 x 2.00 x 38.00 L.	Aluminum-6061

Parts List

UNLESS OTHERWISE SPECIFIED:
DIMENSIONS ARE IN INCHES
TOLERANCES
DECIMALS .XX +/- .05 .XXX +/-.010
ANGULAR +/- .5
DO NOT SCALE DRAWING

DRAWN	Chuck	10/4/2007
CHECKED		
QA		
MFG		
APPROVED		

NATIONAL DATA BUOY CENTER
John C. Stennis Space Center
Stennis Space Center, Mississippi,39529

TITLE
Wind Fin Bracket

SIZE C | DWG NO 02.3F01259 | REV
SCALE | SHEET 1 OF 1

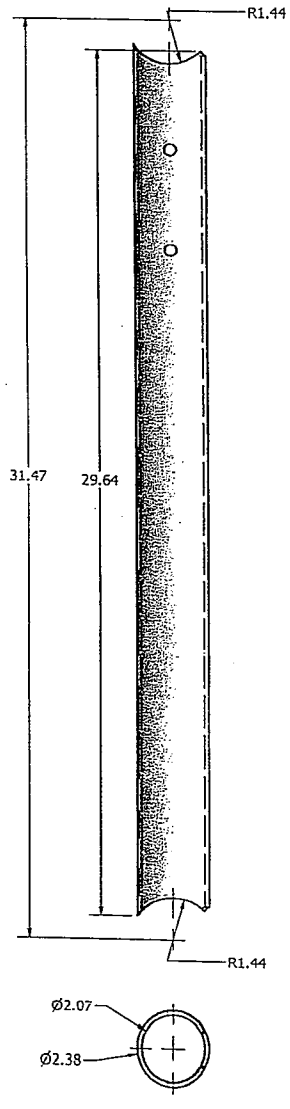

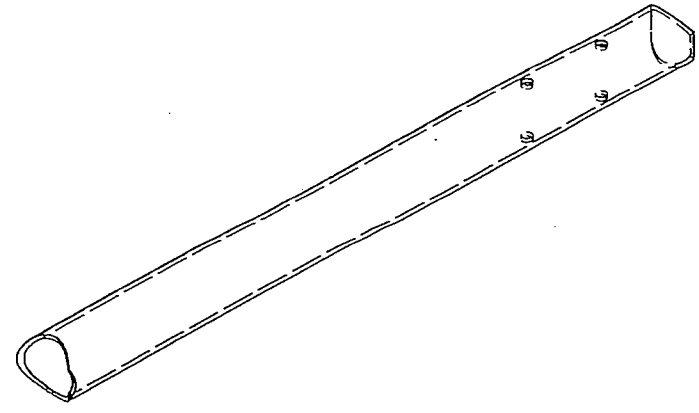

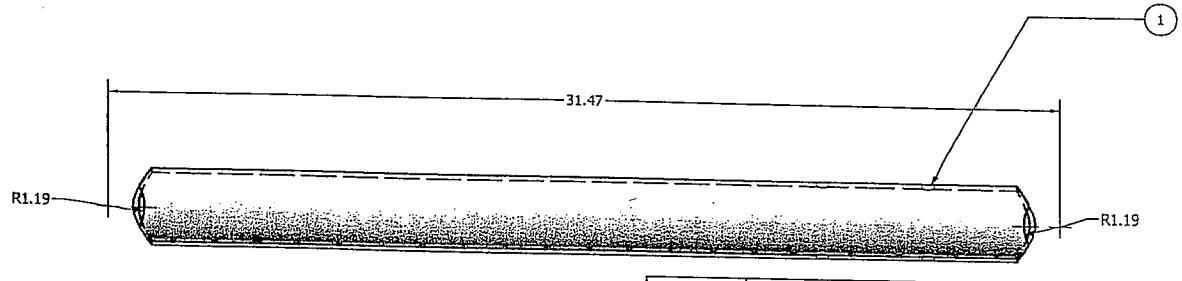

ITEM	QTY	PART NUMBER	DESCRIPTION	MATERIAL
1	1	Tower Lower Brace	Pipe, 2" Sch. 40 x 29.64L.	Aluminum-6061

Parts List

UNLESS OTHERWISE SPECIFIED:
DIMENSIONS ARE IN INCHES
TOLERANCES
DECIMALS .XX +/- .05 .XXX +/-.010
ANGULAR +/- .5
DO NOT SCALE DRAWING

DRAWN	chuckc	10/16/2007
CHECKED		
QA		
MFG		
APPROVED		

NATIONAL DATA BUOY CENTER
John C. Stennis Space Center
Stennis Space Center, Mississippi,39529

TITLE
TOWER LOWER BRACE

SIZE C | DWG NO 02.3F01258 | REV

SCALE | SHEET 1 OF 1

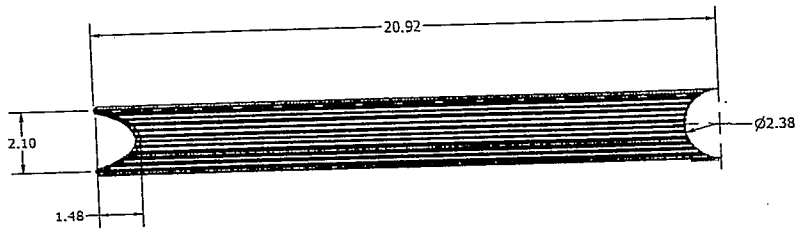

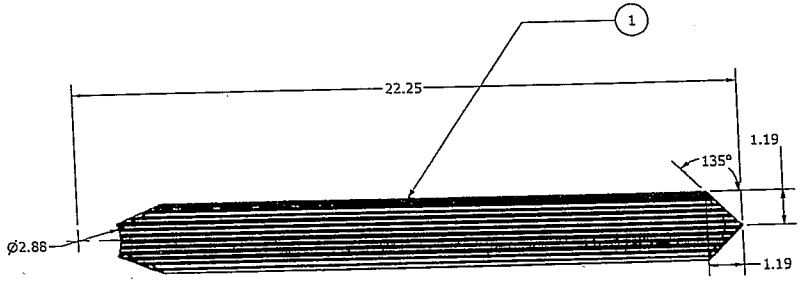

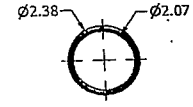

ITEM	QTY	PART NUMBER	DESCRIPTION	MATERIAL
1	1	Tower Cross Brace	PIPE, 2" Sch. 40 x 20.92L.	Aluminum-6061

Parts List

UNLESS OTHERWISE SPECIFIED:
DIMENSIONS ARE IN INCHES
TOLERANCES
DECIMALS .XX +/- .05 .XXX +/-.010
ANGULAR +/- .5
DO NOT SCALE DRAWING

DRAWN	chuckc	10/16/2007
CHECKED		
QA		
MFG		
APPROVED		

NATIONAL DATA BUOY CENTER
John C. Stennis Space Center
Stennis Space Center, Mississippi,39529

TITLE
TOWER CROSS BRACE

SIZE C | DWG NO 02.3F01257 | REV

SCALE | SHEET 1 OF 1

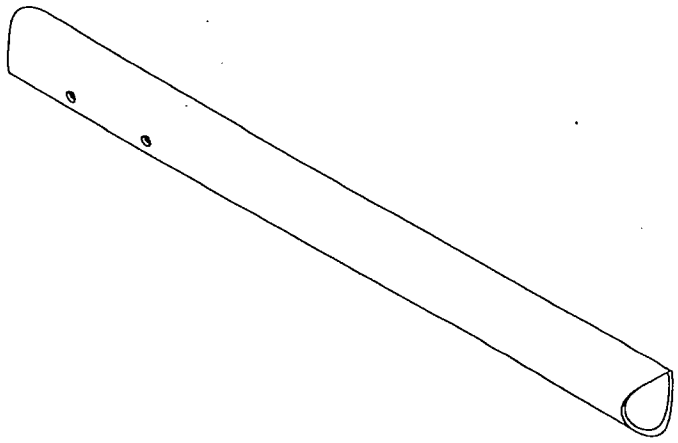

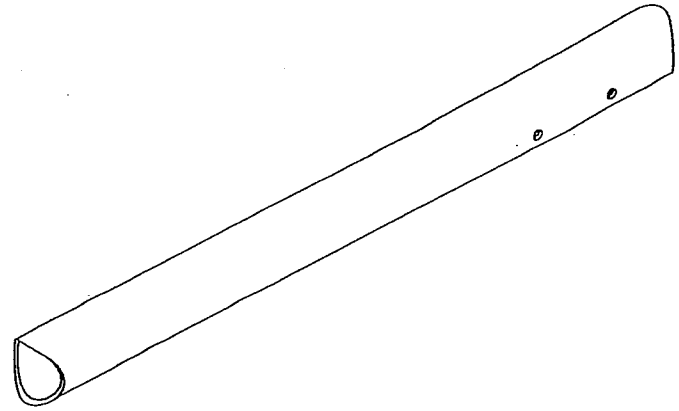

Note:
Holes For Safety Ring
Will Be Spot Drilled
During Installation.

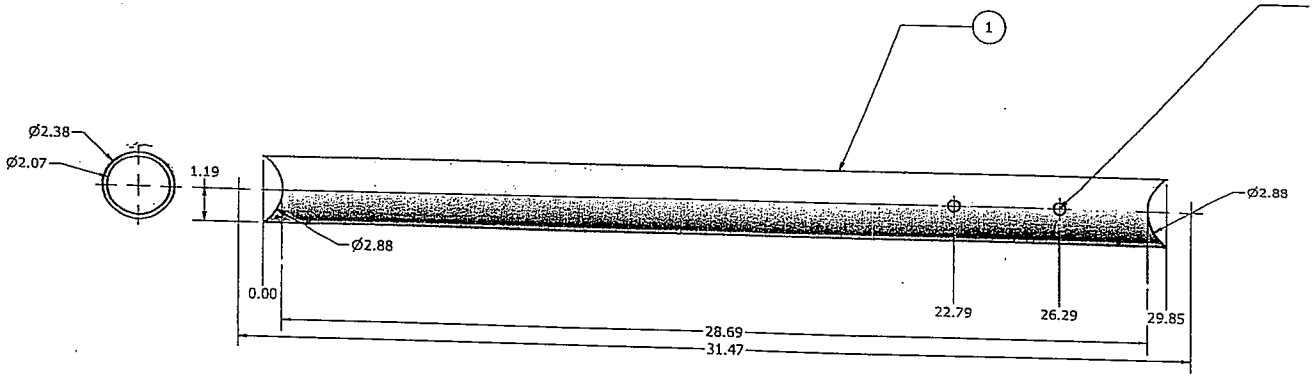

ITEM	QTY	PART NUMBER	Ctrl#	DESCRIPTION	MATERIAL
1	1	Tower Shelf Brace	2160	Pipe, 2" Sch. 40 x 29.85 L.	Aluminum-6061

Parts List

UNLESS OTHERWISE SPECIFIED:
DIMENSIONS ARE IN INCHES
TOLERANCES
DECIMALS .XX +/- .05 .XXX +/-.010
ANGULAR +/- .5
DO NOT SCALE DRAWING

DRAWN	chuckc	10/16/2007
CHECKED		
QA		
MFG		
APPROVED		

NATIONAL DATA BUOY CENTER
John C. Stennis Space Center
Stennis Space Center, Mississippi,39529

TITLE
TOWER SHELF BRACE

SIZE C | DWG NO 02.3F01256 | REV

SCALE | SHEET 1 OF 1

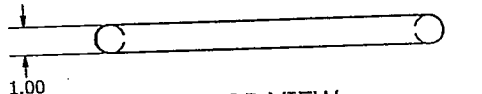

TOP VIEW

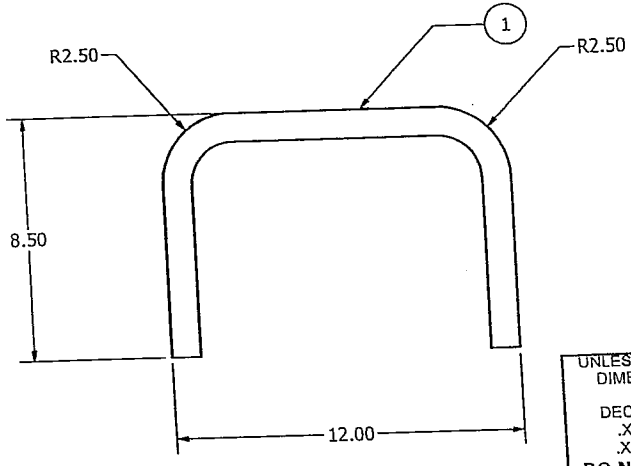

FRONT VIEW
SCALE 1 / 4

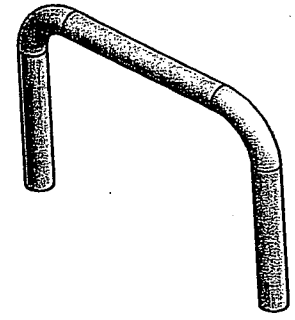

ISOMETRIC VIEW
SCALE 1 / 4

ITEM	QTY	PART NUMBER	DESCRIPTION	MATERIAL
1	1	Ladder Rung	BAR,ROUND, 1.00 DIA. X 28.28 LG.	Aluminum-6061

Parts List

UNLESS OTHERWISE SPECIFIED:
DIMENSIONS ARE IN INCHES
TOLERANCES
DECIMALS .XX +/- .05 .XXX +/-.010
ANGULAR +/- .5
DO NOT SCALE DRAWING

DRAWN	T. RUTLEDGE	10/3/2007
CHECKED		
QA		
MFG		
APPROVED		

NATIONAL DATA BUOY CENTER
John C. Stennis Space Center
Stennis Space Center, Mississippi,39529

TITLE
LADDER RUNG

SIZE	DWG NO	REV
B	02.3F01253	

SCALE

SHEET 1 OF 1

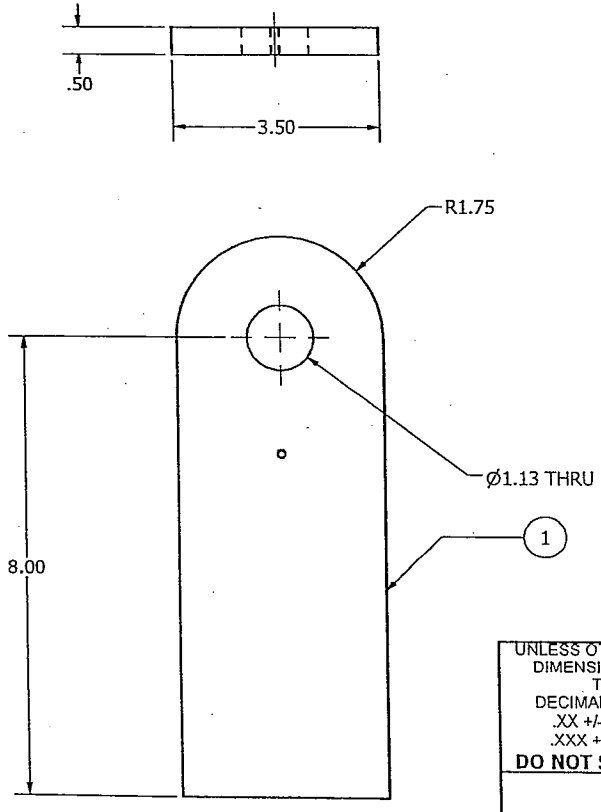

SCALE 1 / 2

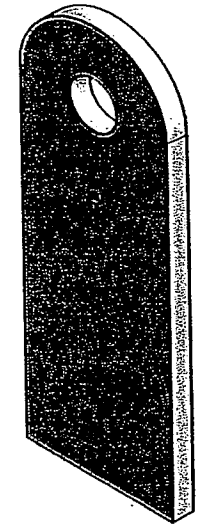

ISOMETRIC VIEW

ITEM	QTY	PART NUMBER	DESCRIPTION	MATERIAL
1	1	Tower Leg Padeye	PLATE, .50 X 3.50 X 9.75	Aluminum-6061

Parts List

UNLESS OTHERWISE SPECIFIED:
DIMENSIONS ARE IN INCHES
TOLERANCES
DECIMALS .XX +/- .05 .XXX +/-.010
ANGULAR +/- .5
DO NOT SCALE DRAWING

DRAWN	T. RUTLEDGE	10/5/2007
CHECKED		
QA		
MFG		
APPROVED		

NATIONAL DATA BUOY CENTER
John C. Stennis Space Center
Stennis Space Center, Mississippi,39529

TITLE

TOWER LEG PADEYE

SIZE	DWG NO	REV
B	02.3F01252	

SCALE

SHEET 1 OF 1

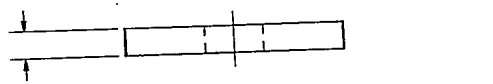

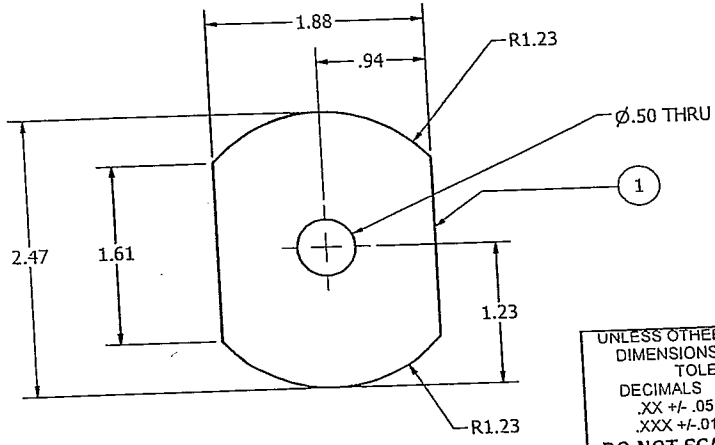

SCALE 1 : 1

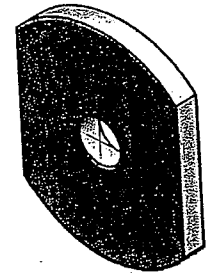

ISOMETRIC VIEW3

ITEM	QTY	PART NUMBER	DESCRIPTION	MATERIAL
1	1	Tower Leg End Cap	PLATE, .25 X 1.88. X 2.47	Aluminum-6061

Parts List

UNLESS OTHERWISE SPECIFIED:
DIMENSIONS ARE IN INCHES
TOLERANCES
DECIMALS .XX +/- .05 .XXX +/-.010
ANGULAR +/- .5
DO NOT SCALE DRAWING

DRAWN	T. RUTLEDGE	10/5/2007
CHECKED		
QA		
MFG		
APPROVED		

NATIONAL DATA BUOY CENTER
John C. Stennis Space Center
Stennis Space Center, Mississippi,39529

TITLE

TOWER LEG END CAP

SIZE	DWG NO	REV
B	02.3F01251	

SCALE

SHEET 1 OF 1

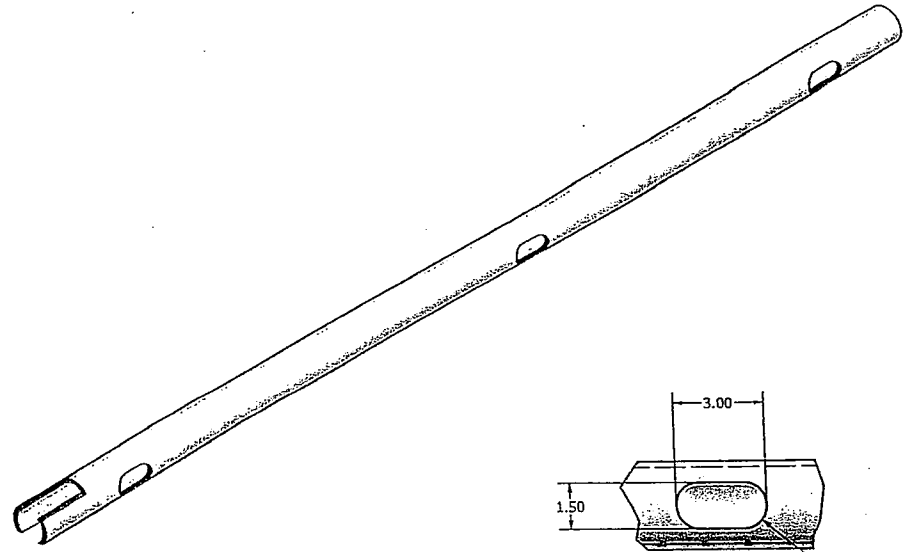

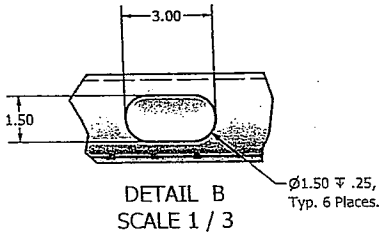

DETAIL B
SCALE 1 / 3

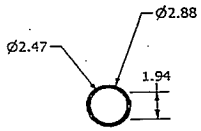

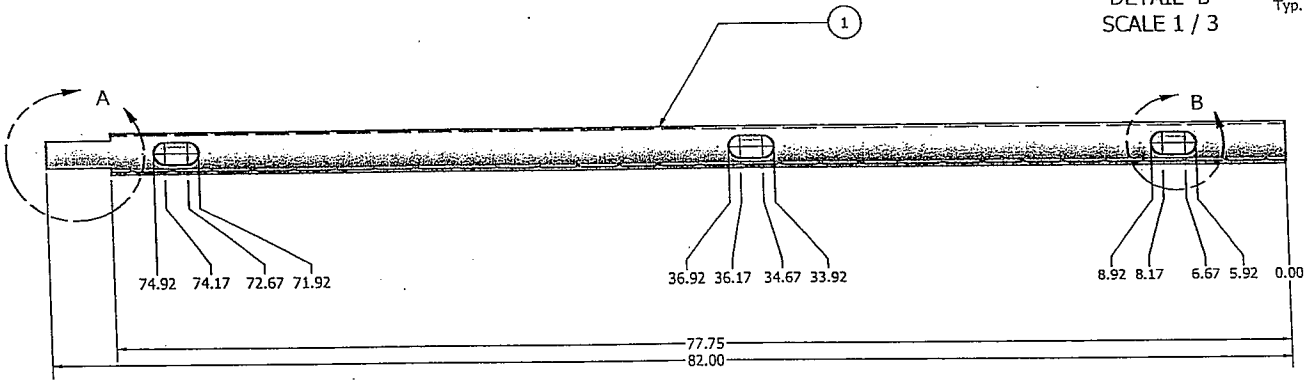

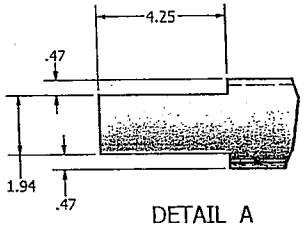

DETAIL A
SCALE 1 / 3

ITEM	QTY	PART NUMBER	Ctrl#	DESCRIPTION	MATERIAL
1	1	Tower Leg	4720	PIPE, 2 1/2" SCH. 40	Aluminum-6061

Parts List

UNLESS OTHERWISE SPECIFIED:
DIMENSIONS ARE IN INCHES
TOLERANCES
DECIMALS .XX +/- .05 .XXX +/-.010
ANGULAR +/- .5
DO NOT SCALE DRAWING

DRAWN	chuckc	10/16/2007
CHECKED		
QA		
MFG		
APPROVED		

NATIONAL DATA BUOY CENTER
John C. Stennis Space Center
Stennis Space Center, Mississippi,39529

TITLE
TOWER LEG

SIZE C | DWG NO 02.3F01250 | REV

SCALE | SHEET 1 OF 1

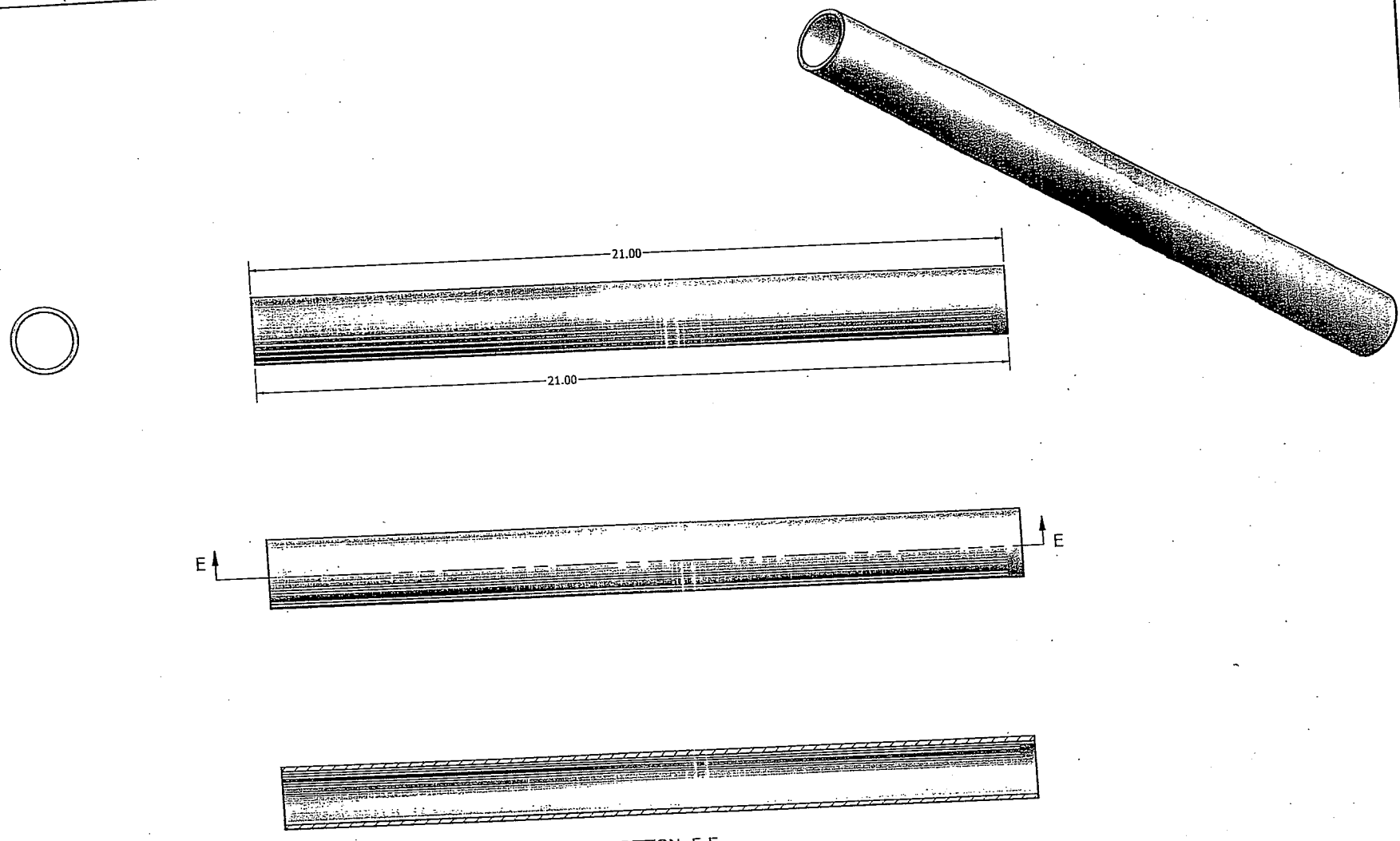

SECTION E-E
SCALE 1/2

UNLESS OTHERWISE SPECIFIED: DIMENSIONS ARE IN INCHES TOLERANCES DECIMALS .XX +/- .05 .XXX +/-.010 ANGULAR +/- .5 DO NOT SCALE DRAWING	DRAWN chuckc	5/29/2008	NATIONAL DATA BUOY CENTER John C. Stennis Space Center Stennis Space Center, Mississippi,39529
	CHECKED		TITLE Removable Personnel Support
	QA		
	MFG		
	APPROVED		SIZE C / DWG NO 02.3F01207 / REV
			SCALE / SHEET 4 OF 4

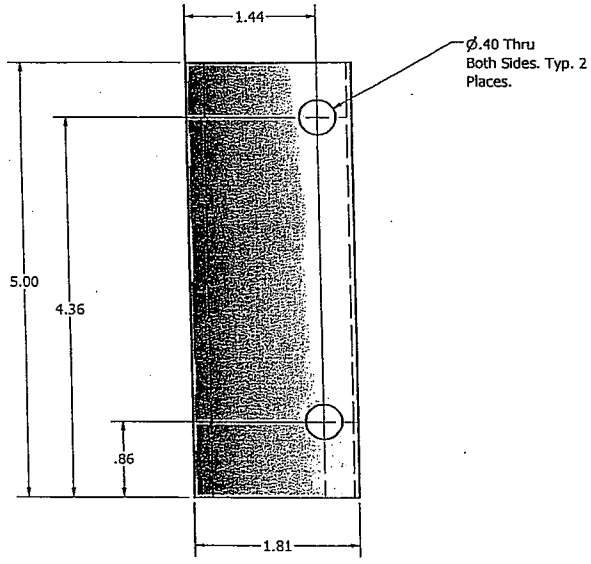

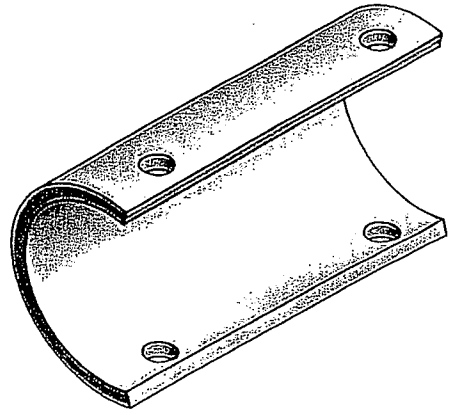

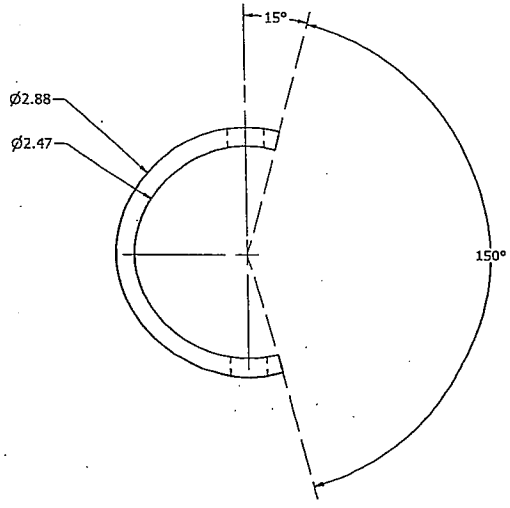

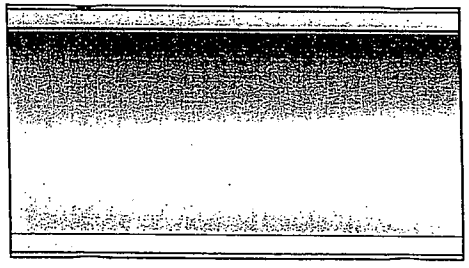

UNLESS OTHERWISE SPECIFIED: DIMENSIONS ARE IN INCHES TOLERANCES DECIMALS .XX +/- .05 .XXX +/-.010 ANGULAR +/- .5 DO NOT SCALE DRAWING	DRAWN chuckc	5/29/2008
	CHECKED	
	QA	
	MFG	
	APPROVED	

NATIONAL DATA BUOY CENTER
John C. Stennis Space Center
Stennis Space Center, Mississippi,39529

TITLE

Removable Personnel Support

SIZE	DWG NO	REV
C	02.3F01207	

SCALE

SHEET 3 OF 4

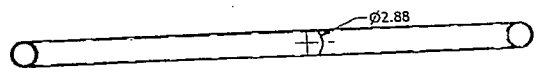

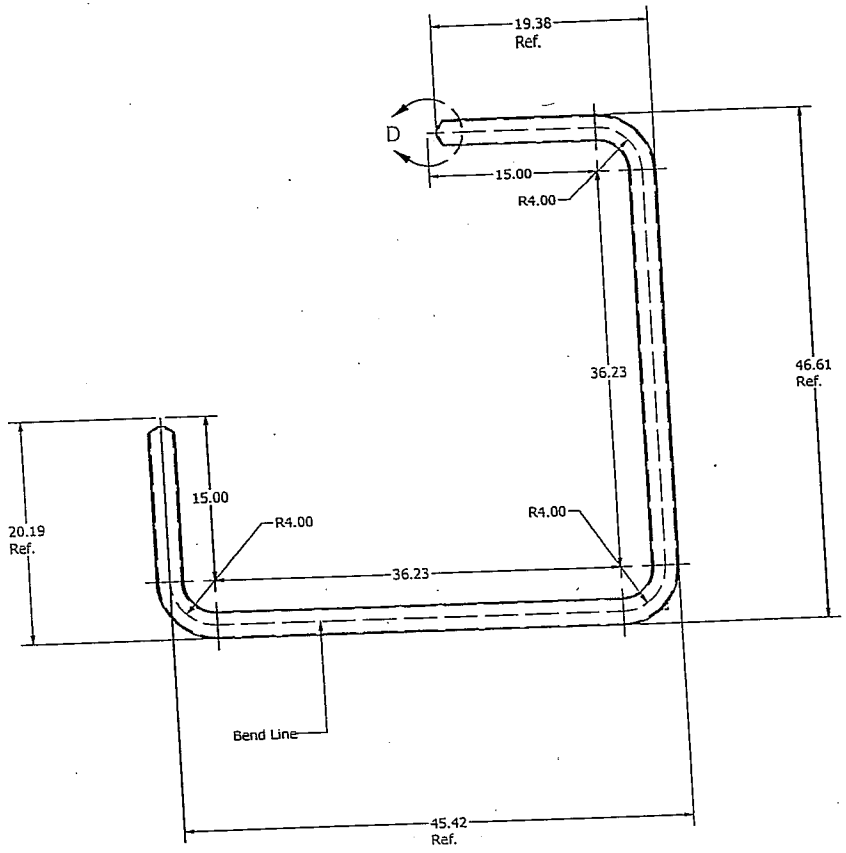

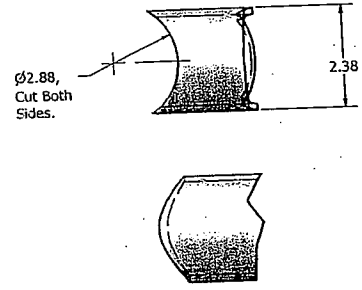

DETAIL D
SCALE 1/2

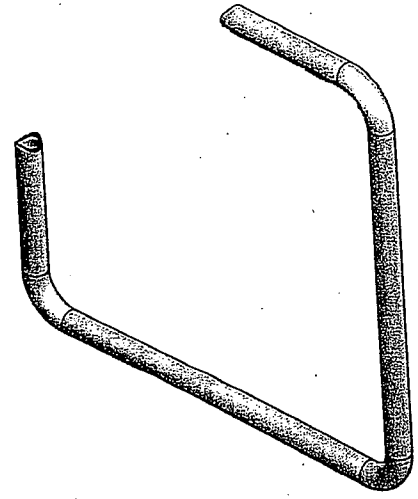

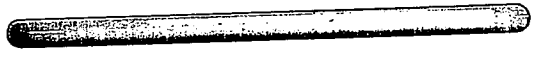

UNLESS OTHERWISE SPECIFIED:
DIMENSIONS ARE IN INCHES
TOLERANCES
DECIMALS .XX +/- .05 .XXX +/-.010
ANGULAR +/- .5
DO NOT SCALE DRAWING

DRAWN	chuckc	5/29/2008
CHECKED		
QA		
MFG		
APPROVED		

NATIONAL DATA BUOY CENTER
John C. Stennis Space Center
Stennis Space Center, Mississippi,39529

TITLE
Removable Personnel Support

SIZE	DWG NO	REV
C	02.3F01207	

SCALE

SHEET 2 OF 4

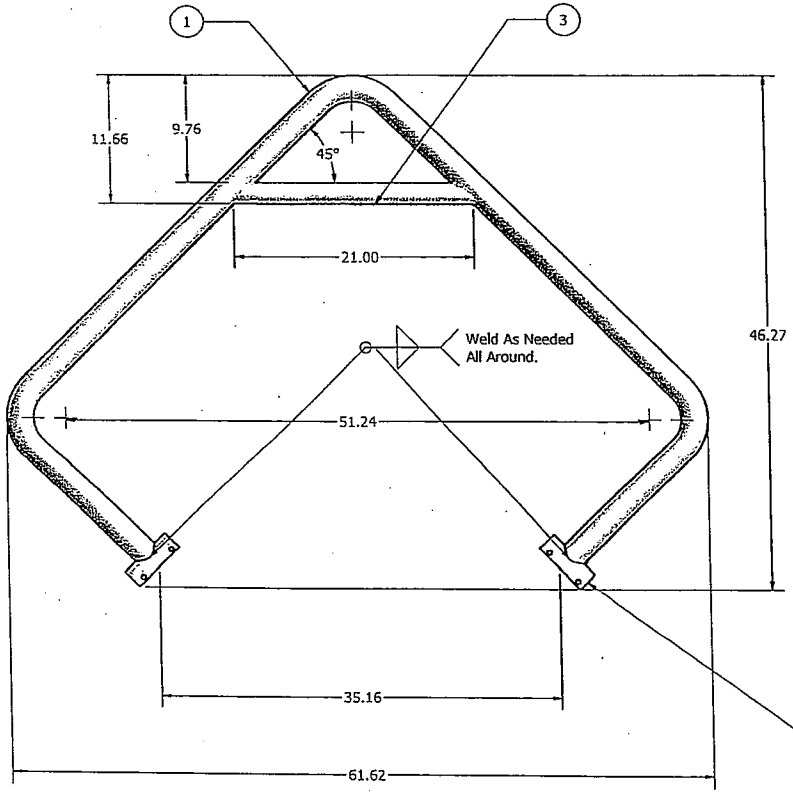

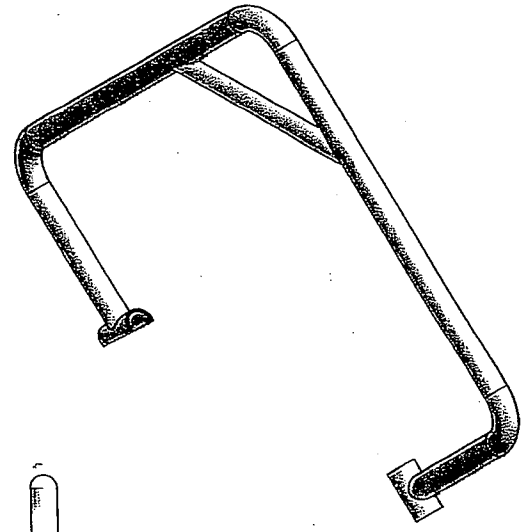

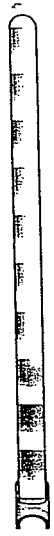

ITEM	QTY	PART NUMBER	DESCRIPTION
3	1	Safety Bar Cross Member	Al. 6061 Schd. 40 Pipe, 1.90" Od. X 21.1" Lg.
2	1	Horizontal Safety Ring	Al. 6061 Schd. 40 Pipe, 2.375" Od. X 114.47" Lg
1	2	Horizontal Foot	Al. 6061 Schd. 40 Pipe, 2.875" Od. X 5.0" Lg.

Parts List

UNLESS OTHERWISE SPECIFIED:
DIMENSIONS ARE IN INCHES
TOLERANCES
DECIMALS .XX +/- .05 .XXX +/-.010
ANGULAR +/- .5
DO NOT SCALE DRAWING

DRAWN	chuckc	5/29/2008
CHECKED		
QA		
MFG		
APPROVED		

NATIONAL DATA BUOY CENTER
John C. Stennis Space Center
Stennis Space Center, Mississippi,39529

TITLE
Removable Personnel Support

SIZE	DWG NO	REV
C	02.3F01207	

SCALE

SHEET 1 OF 4

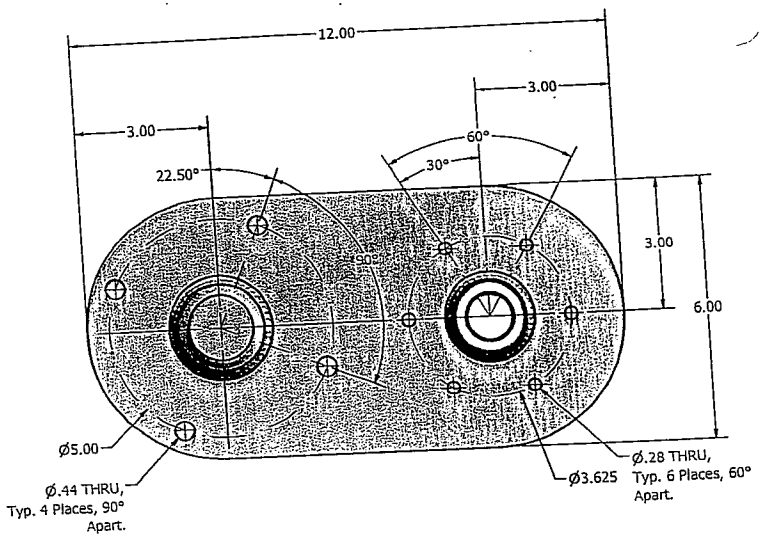

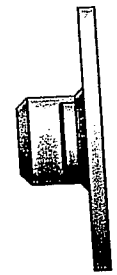

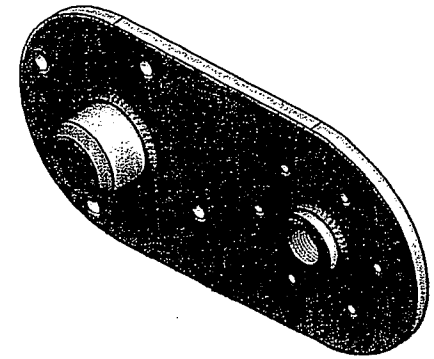

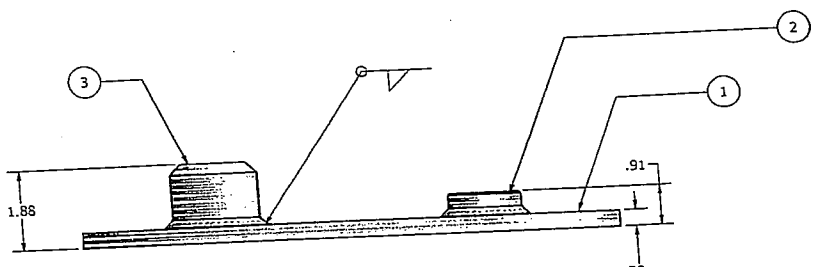

RF ANTENNA MOUNT WELDMENT -001

ITEM	QTY	PART NUMBER	DESCRIPTION	MATERIAL
3	1	02.3F01265-001	SENSOR MOUNT DOWEL	Aluminum-6061
2	1	02.3F01269-001	SPLIT COUPLER	Aluminum-6061
1	1	02.3F01268-001	RF ANTENNA MOUNTING FLANGE	Aluminum-6061

Parts List

UNLESS OTHERWISE SPECIFIED:
DIMENSIONS ARE IN INCHES
TOLERANCES
DECIMALS .XX +/- .05 .XXX +/-.010
ANGULAR +/- .5
DO NOT SCALE DRAWING

DRAWN chuckc 10/18/2007
CHECKED
QA
MFG
APPROVED

NATIONAL DATA BUOY CENTER
John C. Stennis Space Center
Stennis Space Center, Mississippi,39529

TITLE
RF ANTENNA MOUNT WELDMENT

SIZE C
DWG NO 02.3F01206
REV
SCALE
SHEET 1 OF 1

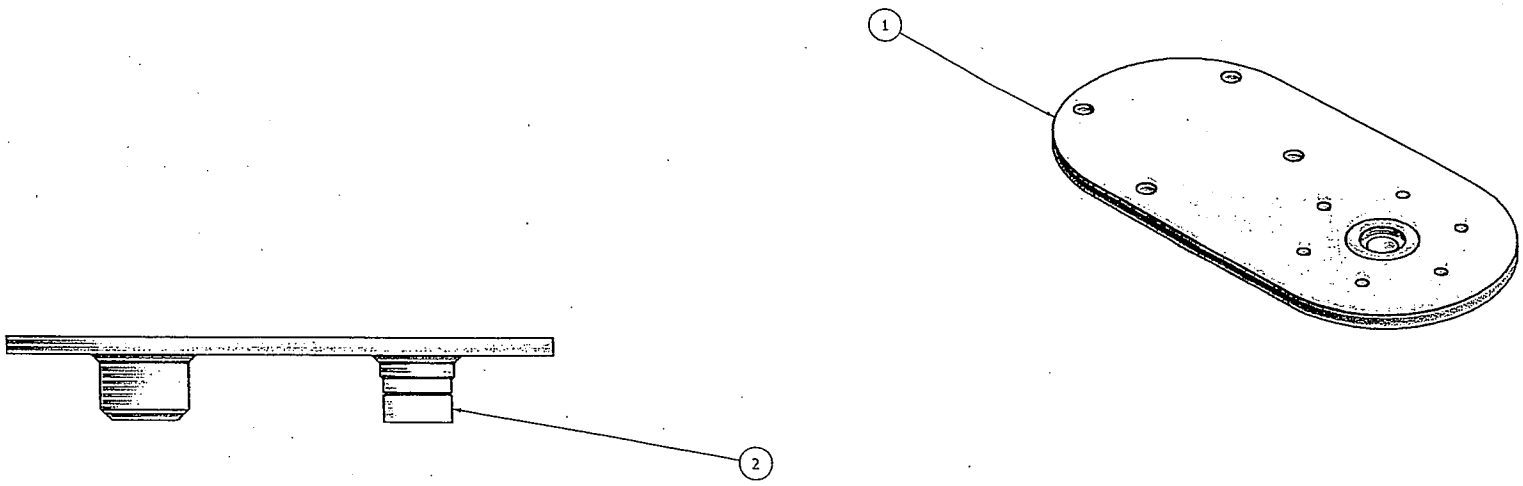

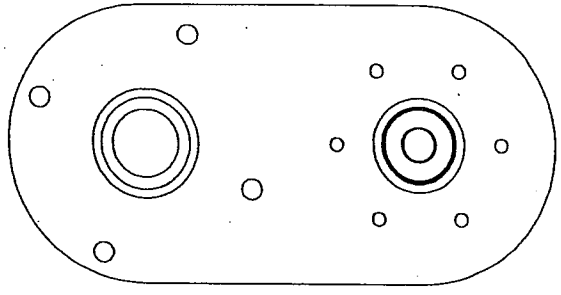

ITEM	QTY	PART NUMBER	DESCRIPTION	MATERIAL
2	1	NYST-3-003	Stuffing Tube, Dorn, 1" NPT size 3	Nylon-6/6
1	1	02.3F01206-001	RF Antenna Mount Weldment	Welded Aluminum-6061

Parts List

UNLESS OTHERWISE SPECIFIED:
DIMENSIONS ARE IN INCHES
TOLERANCES
DECIMALS .XX +/- .05 .XXX +/-.010
ANGULAR +/- .5
DO NOT SCALE DRAWING

DRAWN	chuckc	10/18/2007
CHECKED		
QA		
MFG		
APPROVED		

NATIONAL DATA BUOY CENTER
John C. Stennis Space Center
Stennis Space Center, Mississippi,39529

TITLE
RF ANTENNA MOUNT

SIZE C | DWG NO 02.3F01205 | REV

SCALE | SHEET 1 OF 1

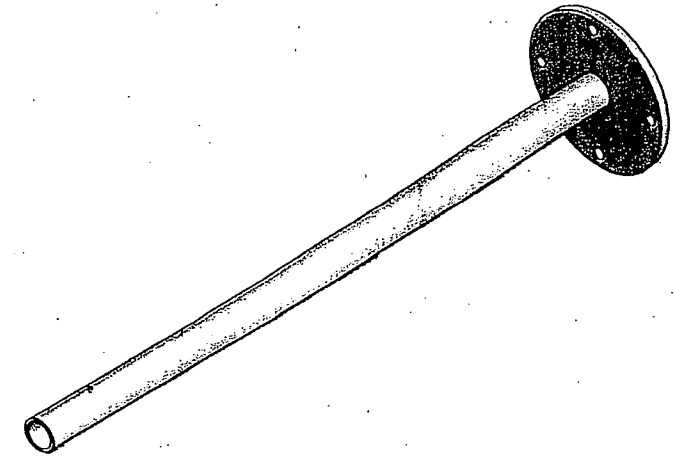

DETAIL A
SCALE 1/1

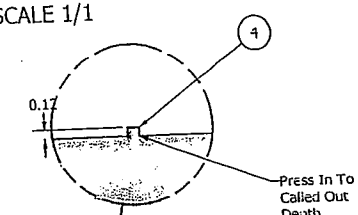

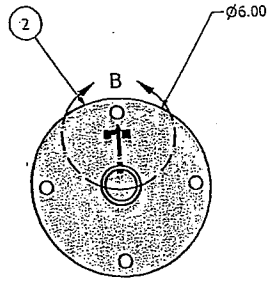

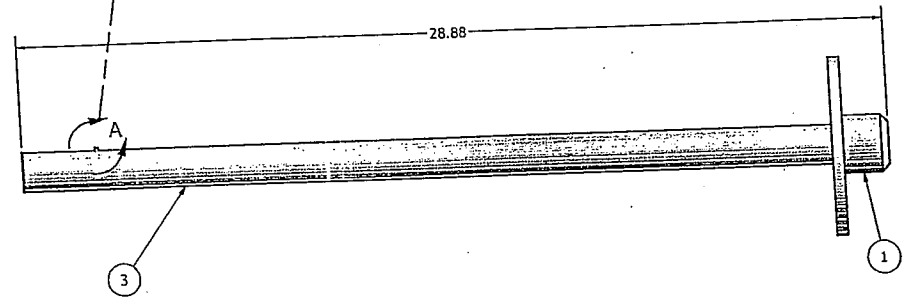

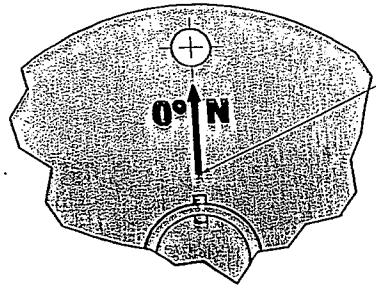

DETAIL B
SCALE 1/1

ITEM	QTY	PART NUMBER	DESCRIPTION	MATERIAL
4	1	NDBC CTRL#	Wind Sensor Guide Pin	Aluminum-6061
3	1	02.3F01267-001	Wind Sensor Pipe	Aluminum-6061
2	1	02.3F01271-001	Wind Sensor Flange	Aluminum-6061
1	1	02.3F01265-001	Sensor Mount Dowel	Aluminum-6061

Parts List

UNLESS OTHERWISE SPECIFIED:
DIMENSIONS ARE IN INCHES
TOLERANCES
DECIMALS .XX +/- .05 .XXX +/-.010
ANGULAR +/- .5
DO NOT SCALE DRAWING

DRAWN	chuckc	10/4/2007
CHECKED		
QA		
MFG		
APPROVED		

NATIONAL DATA BUOY CENTER
John C. Stennis Space Center
Stennis Space Center, Mississippi,39529

TITLE
WIND SENSOR MOUNT

SIZE C | DWG NO 02.3F01204 | REV
SCALE | SHEET 1 OF 1

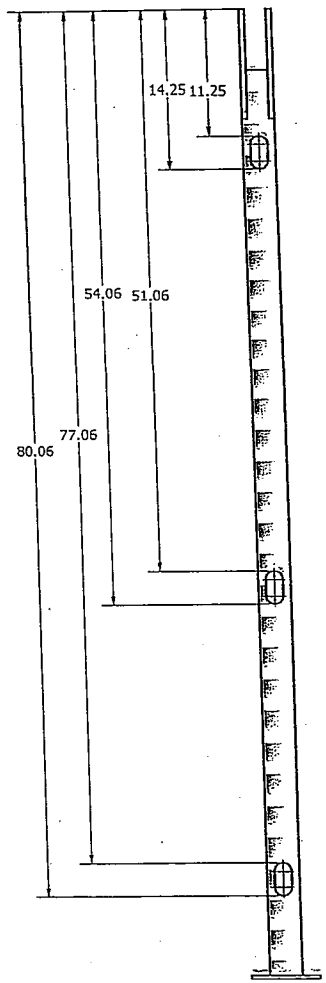

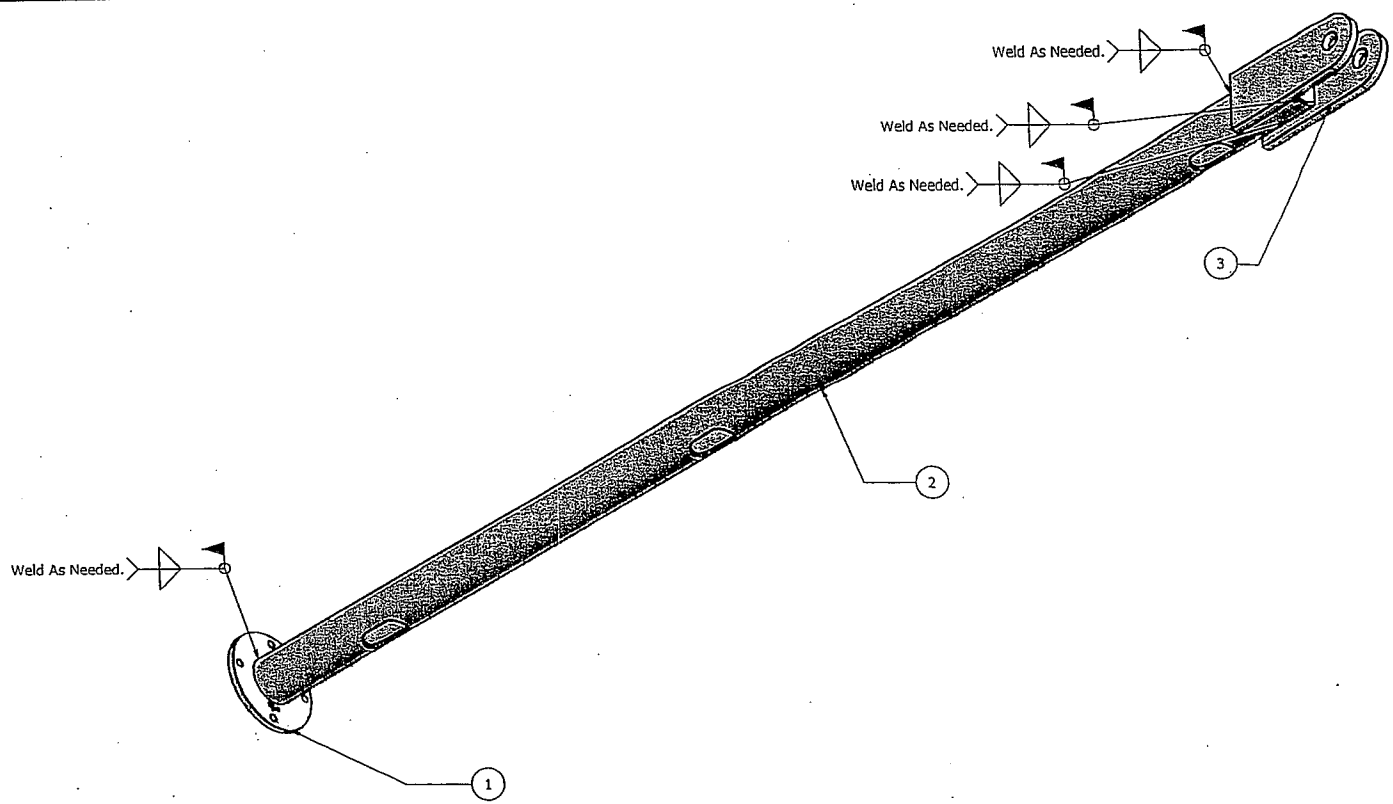

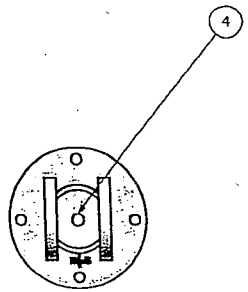

ITEM	QTY	PART NUMBER	DESCRIPTION	MATERIAL
4	1	02.3F01251-001	Tower Leg End Cap	Aluminium-6061
3	2	02.3F01252-001	Tower Leg Padeye	Aluminum-6061
2	1	02.3F01250-001	Tower Leg	Aluminum-6061
1	1	02.3F01266-001	Sensor Mounting Flange	Aluminum-6061

Parts List

UNLESS OTHERWISE SPECIFIED:
DIMENSIONS ARE IN INCHES
TOLERANCES
DECIMALS .XX +/- .05 .XXX +/-.010
ANGULAR +/- .5
DO NOT SCALE DRAWING

DRAWN	chuckc	10/15/2007
CHECKED		
QA		
MFG		
APPROVED		

NATIONAL DATA BUOY CENTER
John C. Stennis Space Center
Stennis Space Center, Mississippi,39529

TITLE
TOWER LEG ASSEMBLY

SIZE	DWG NO	REV
C	02.3F01203	

SCALE

SHEET 1 OF 1

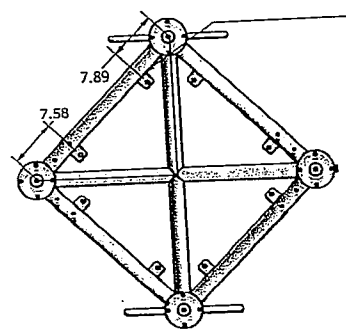

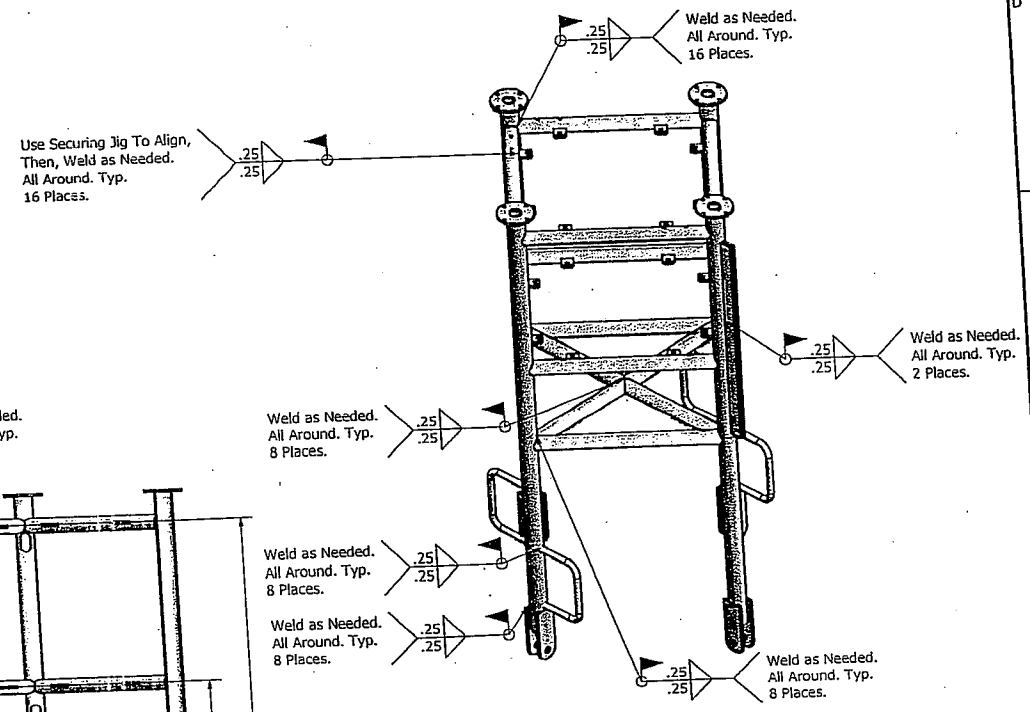

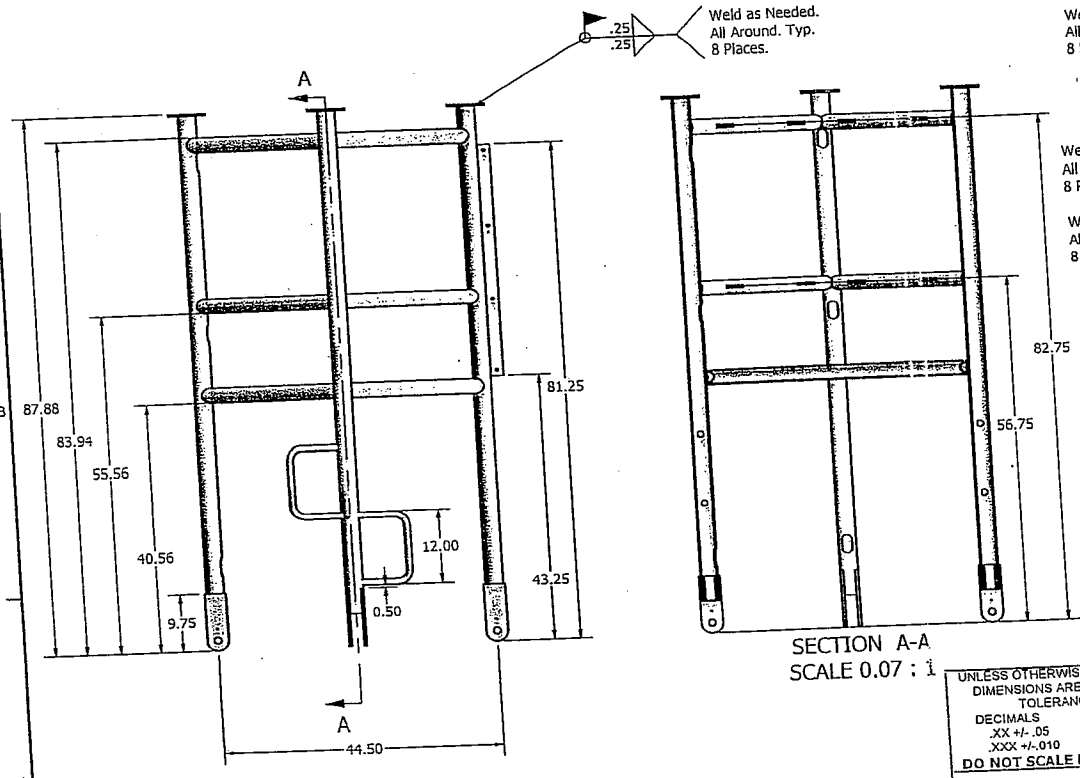

SECTION A-A
SCALE 0.07 : 1

UNLESS OTHERWISE SPECIFIED: DIMENSIONS ARE IN INCHES TOLERANCES DECIMALS .XX +/- .05 .XXX +/-.010 ANGULAR +/- .5 DO NOT SCALE DRAWING	DRAWN chuckc	10/15/2007	NATIONAL DATA BUOY CENTER John C. Stennis Space Center Stennis Space Center, Mississippi,39529
	CHECKED		TITLE
	QA		TOWER FRAME WELDMENT
	MFG		
	APPROVED		SIZE C / DWG NO 02.3F01202 / REV
			SCALE / SHEET 2 OF 2

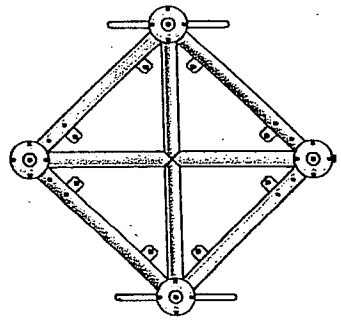

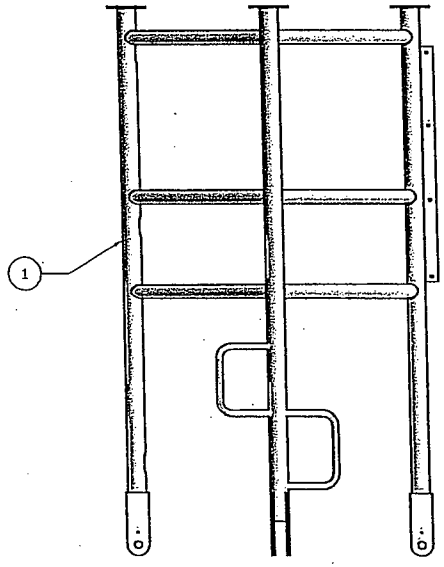

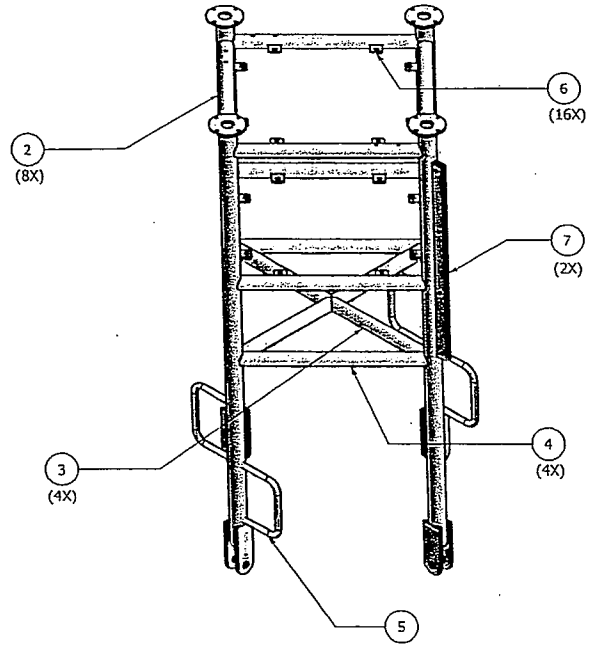

TOWER FRAME WELDMENT -001

ITEM	QTY	PART NUMBER	DESCRIPTION	MATERIAL
7	2	02.3F01259-001	WIND FIN BRACKET	Aluminum-6061
6	16	02.3F01261-001	TOWER SHELF MOUNTING TAB	Aluminum-6061
5	2	02.3F01253-001	LADDER RUNG	Aluminum-6061
4	4	02.3F01258-001	TOWER LOWER BRACE	Aluminum-6061
3	4	02.3F01257-001	TOWER CROSS BRACE	Aluminum-6061
2	8	02.3F01256-001	TOWER SHELF BRACE	Aluminum-6061
1	4	02.3F01203-001	TOWER LEG ASSEMBLY	Aluminum-6061

Parts List

UNLESS OTHERWISE SPECIFIED:
DIMENSIONS ARE IN INCHES
TOLERANCES
DECIMALS .XX +/- .05 .XXX +/-.010
ANGULAR +/- .5
DO NOT SCALE DRAWING

DRAWN	chuckc	10/15/2007
CHECKED		
QA		
MFG		
APPROVED		

NATIONAL DATA BUOY CENTER
John C. Stennis Space Center
Stennis Space Center, Mississippi,39529

TITLE
TOWER FRAME WELDMENT

SIZE	DWG NO	REV
C	02.3F01202	

SCALE

SHEET 1 OF 2

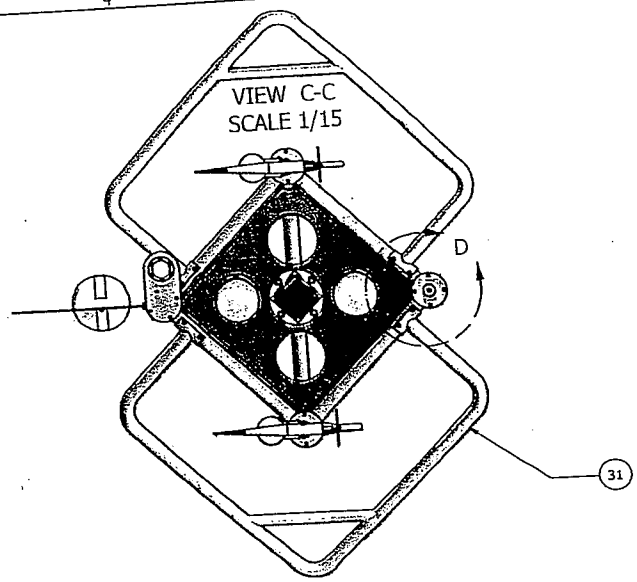

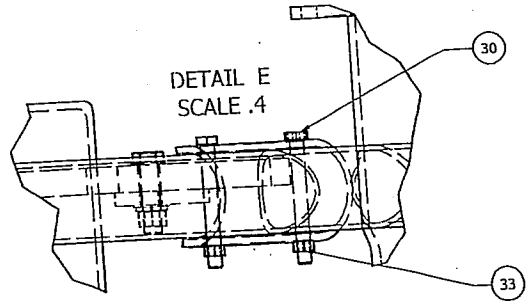

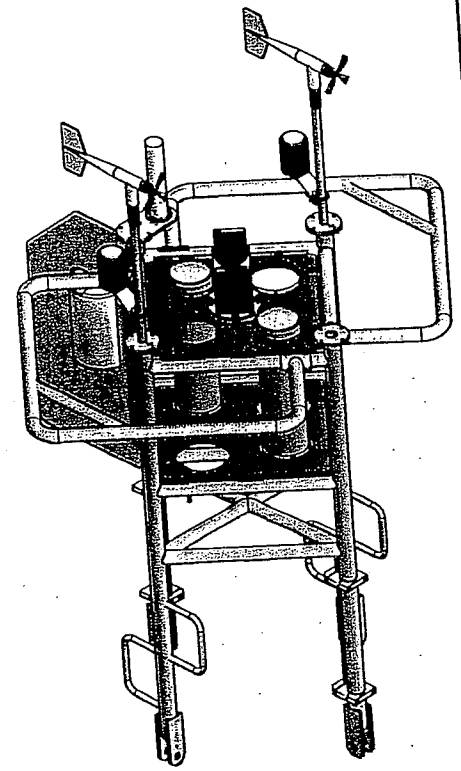

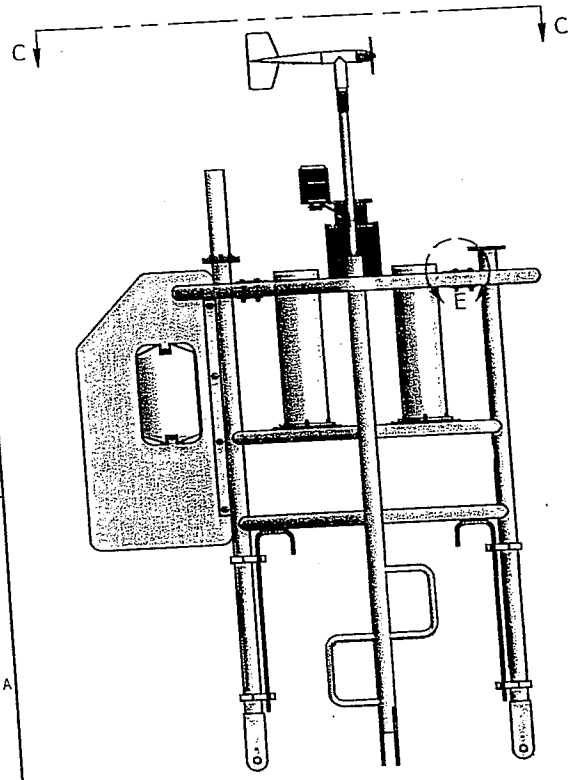

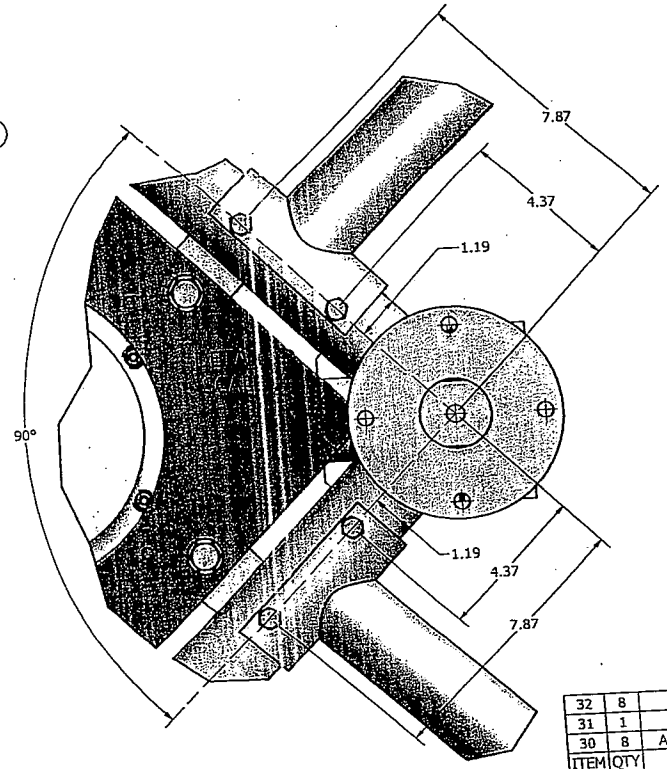

ITEM	QTY	PART NUMBER	DESCRIPTION
32	8	ANSI B18.2.2 - 3/8 - 16	Hex Nut
31	1	02.3F01207-001	Removable Personnel Support
30	8	ANSI B18.2.1 - 3/8-16 UNC - 3.5	Hex Cap Screw

Parts List

UNLESS OTHERWISE SPECIFIED:
DIMENSIONS ARE IN INCHES
TOLERANCES
DECIMALS .XX +/- .05 .XXX +/-.010
ANGULAR +/- .5
DO NOT SCALE DRAWING

DRAWN	chuckc	10/31/2007
CHECKED		
QA		
MFG		
APPROVED		

NATIONAL DATA BUOY CENTER
John C. Stennis Space Center
Stennis Space Center, Mississippi,39529

TITLE
2.3 METER STANDARD BUOY BASIC MAST ASSEMBLY

SIZE C | DWG NO 02.3F01201 | REV

SCALE | SHEET 2 OF 2

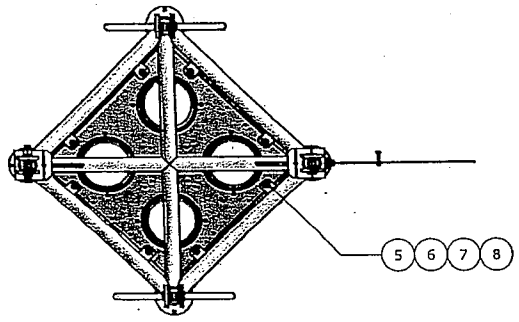

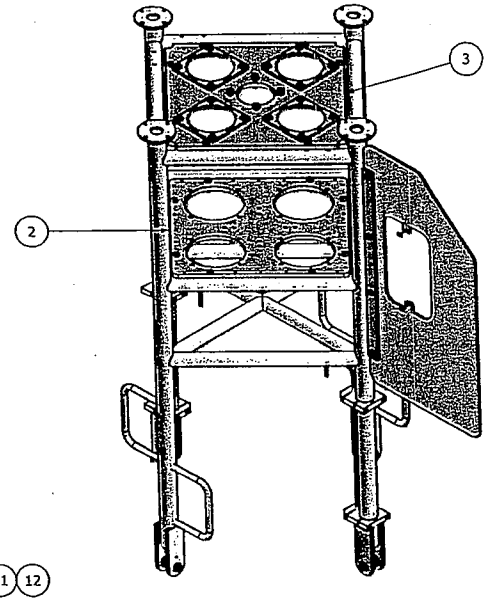

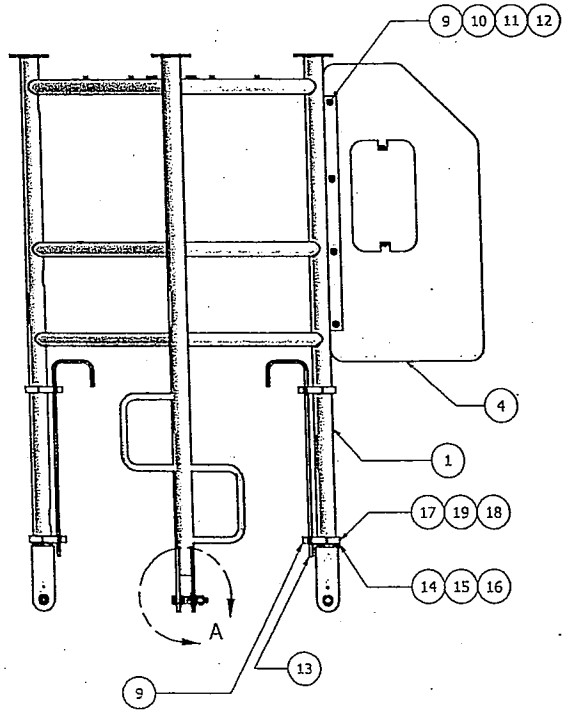

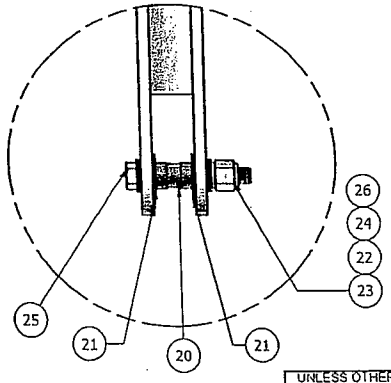

DETAIL A
SCALE 0.25 : 1

ITEM	QTY	PART NUMBER	DESCRIPTION	MATERIAL
29	16	ANSI B18.3 - 3/8 - 16 UNC - 1	Hexagon Socket Head Cap Screw	Steel, Mild
28	16	McMaster-Carr #91950A031	3/8 Washers	316 SST
27	8	02.3F01272-001	TUBE SUPPORT	Grey PVC
26	8	NDBC CTRL #7588	BUSHING, SHOULDER, 0.75 ID 0.875 OD, 1.125 FLANGE OD, 0.75 LONG	PLASTIC
25	4	McMASTER-CARR / 92186A855 NDBC CTRL #6880	SCREW, CAP 0.75-10 X 5.00 316 SST, 3/4 HEX HD	316 SST
24	8	McMASTER-CARR / 91950A036 NDBC CTRL #731	WASHER, FLAT, 0.75, 0.8125 ID 0.108 OD, 316 SST, 3/4 REG.	316 SST
23	4	McMASTER-CARR / 90099A036 NDBC CTRL #6920	NUT, NYLOCK 0.75-10, 316 SST, 3/4 HEX	316 SST
22	4	McMASTER-CARR / 92147A036 NDBC CTRL #2123	WASHER, LOCK, 0.75 316 SST, 3/4 HELICAL SPRING	316 SST
21	8	02.3F01355-001	BRIDLE LEG WASHER	CIP
20	4	02.3F01270-001	TOWER LEG BUSHING	CIP
19	16	McMASTER-CARR / 91950A031 NDBC CTRL #6920	WASHER, FLAT, 0.375, 0.4063 ID 0.8125 OD, 316 SST, 3/8 REG.	316 SST
18	8	McMASTER-CARR / 92185A626 NDBC CTRL #TBD	SCREW, CAP 0.375-16 X 1.25 316 SST, 3/8 SOCKET HD	316 SST
17	8	McMASTER-CARR / 92185A632 NDBC CTRL #TBD	SCREW, CAP 0.375-16 X 2.00 316 SST, 3/8 SOCKET HD	316 SST
18	4	02.3F01264-003	VENT CLAMP BRACE - LARGE END	UHMW White
15	4	02.3F01264-002	VENT CLAMP BRACE - CENTER	UHMW White
14	4	02.3F01264-001	VENT CLAMP BRACE - SMALL END	UHMW White
13	2	02.3F01263-001	VENT PIPE	316 SST
12	4	McMASTER-CARR / 94819A049 NDBC CTRL #2159	NUT, HEX 0.375-16, 316 SST, 3/8 HEX 5/8W 1/4H	316 SST
11	4	McMASTER-CARR / 92186A628 NDBC CTRL #3414	SCREW, CAP 0.375-16 X 1.50 316 SST, 3/8 HEX HD	316 SST
10	24	McMASTER-CARR / 90107A051 NDBC CTRL #4149	WASHER, FLAT, 0.375, 0.4063 ID 1.00 OD, 316 SST, 3/8 WIDE	316 SST
9	20	McMASTER-CARR / 92147A031 NDBC CTRL #723	WASHER, LOCK, 0.375 316 SST 3/8 HELICAL SPRING	316 SST
8	16	McMASTER-CARR / 92186A720 NDBC CTRL #700	SCREW, CAP 0.50-13 X 2.00 316 SST, 1/2 HEX HD	316 SST
7	16	McMASTER-CARR / 90715A165	NUT, HEX 0.500-13, 316 SST, NYLOCK	316 SST
6	16	McMASTER-CARR / 92147A033 NDBC CTRL #7785	WASHER, LOCK, 0.50 316 SST, 1/2 HELICAL SPRING	316 SST
5	32	McMASTER-CARR / 91950A033 NDBC CTRL #729	WASHER, FLAT, 0.50, 0.531 ID 1.0625 OD, 316 SST, 1/2 REG.	316 SST
4	1	02.3F01260-001	WIND FIN	AL- 6061
3	1	02.3F01262-002	TOWER SHELF (UPPER)	Extren
2	1	02.3F01262-001	TOWER SHELF (LOWER)	Extren
1	1	02.3F01202-001	TOWER FRAME WELDMENT	AL-6061

-001 Parts List

UNLESS OTHERWISE SPECIFIED:
DIMENSIONS ARE IN INCHES
TOLERANCES
DECIMALS .XX +/- .05 .XXX +/-.010
ANGULAR +/- .5
DO NOT SCALE DRAWING

DRAWN	chuckc	10/31/2007
CHECKED		
QA		
MFG		
APPROVED		

NATIONAL DATA BUOY CENTER
John C. Stennis Space Center
Stennis Space Center, Mississippi,39529

TITLE
2.3 METER STANDARD BUOY BASIC MAST ASSEMBLY

SIZE	DWG NO	REV
C	02.3F01201	

SCALE

SHEET 1 OF 2

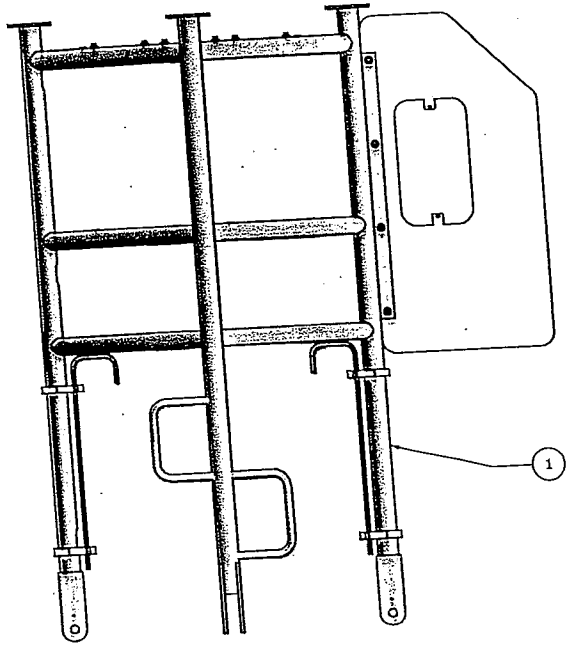

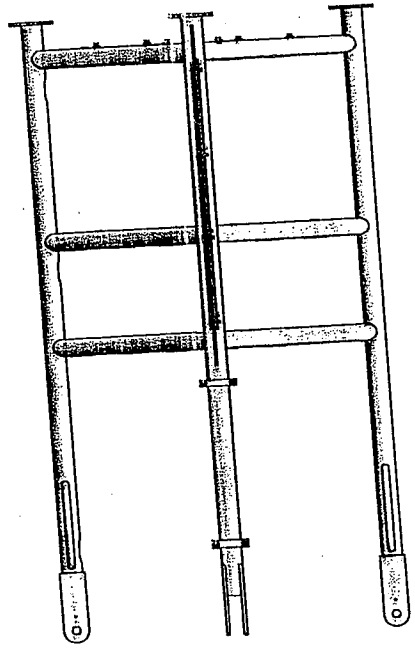

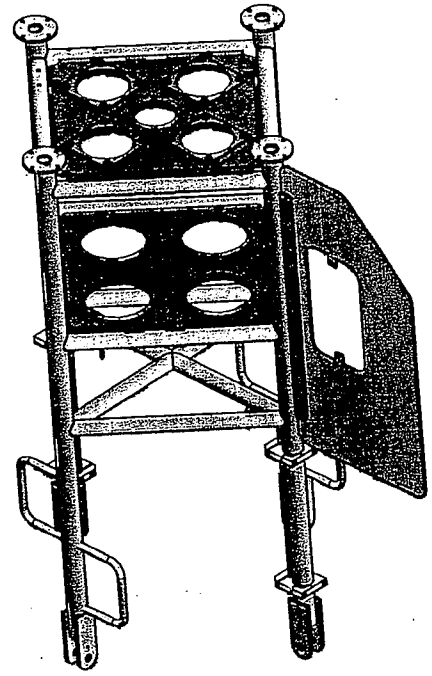

2.3 METER STANDARD BUOY MAST MECHANICAL ASSEMBLY -003
DART CONFIGURATION (DART)

ITEM	QTY	PART NUMBER	DESCRIPTION
1	1	02.3F01201-001	2.3 Meter STD Buoy Basic Mast Configuration

Parts List

UNLESS OTHERWISE SPECIFIED:
DIMENSIONS ARE IN INCHES
TOLERANCES
DECIMALS .XX +/- .05 .XXX +/-.010
ANGULAR +/- .5
DO NOT SCALE DRAWING

DRAWN	chuckc	1/8/2008
CHECKED		
QA		
MFG		
APPROVED		

NATIONAL DATA BUOY CENTER
John C. Stennis Space Center
Stennis Space Center, Mississippi,39529

TITLE
2.3 Meter Standard Buoy Mast Mechanical Assembly

SIZE C | DWG NO 02.3F01200 | REV

SCALE | SHEET 3 OF 3

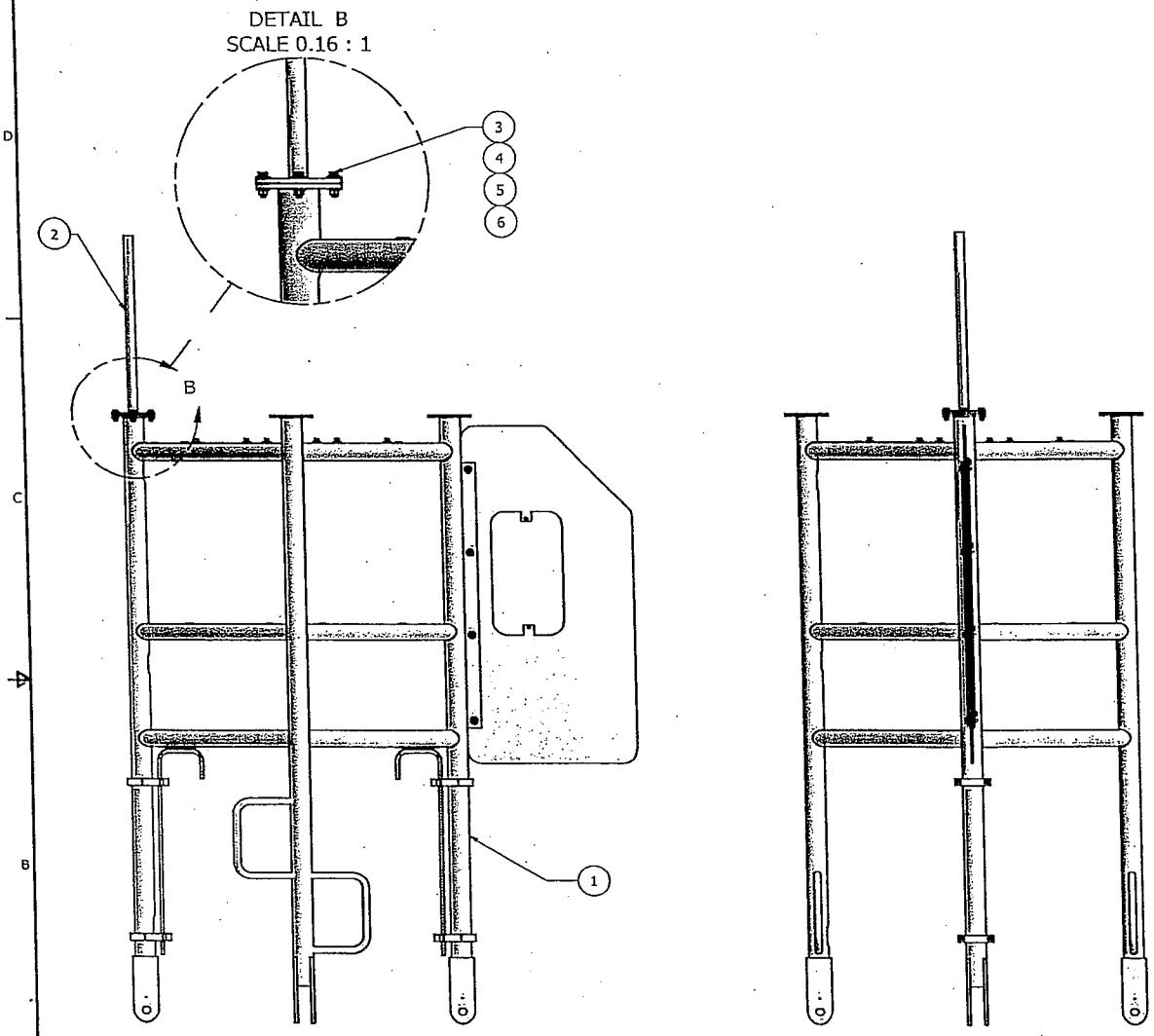

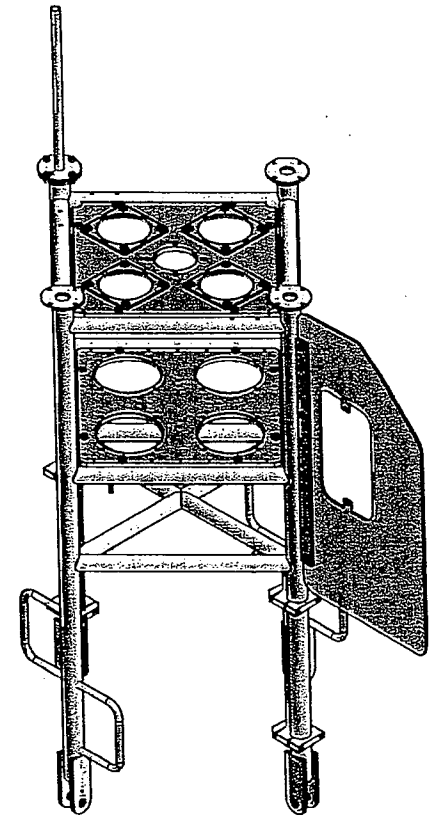

2.3 METER STANDARD BUOY MAST MECHANICAL ASSEMBLY -002
TAO CONFIGURATION (TAO)

ITEM	QTY	PART NUMBER	DESCRIPTION
6	4	ANSI B18.2.2 - 3/8 - 16	Hex Nut, Nylock
5	8	ANSI B18.22.1 - 3/8 - narrow - Type A	Washer A
4	4	ASME B18.21.1 - 3/8 Regular	Helical Spring Lock Washer
3	4	ANSI B18.2.1 - 3/8-16 UNC - 1.5	Hex Cap Screw
2	1	02.3F01204-001	Wind Sensor Mount
1	1	02.3F01201-001	2.3 Meter STD Buoy Basic Mast Assembly

Parts List

UNLESS OTHERWISE SPECIFIED:
DIMENSIONS ARE IN INCHES
TOLERANCES
DECIMALS .XX +/- .05 .XXX +/-.010
ANGULAR +/- .5
DO NOT SCALE DRAWING

DRAWN	chuckc	1/8/2008
CHECKED		
QA		
MFG		
APPROVED		

NATIONAL DATA BUOY CENTER
John C. Stennis Space Center
Stennis Space Center, Mississippi,39529

TITLE
2.3 Meter Standard Buoy Mast Mechanical Assembly

SIZE C | DWG NO 02.3F01200 | REV

SCALE | SHEET 2 OF 3

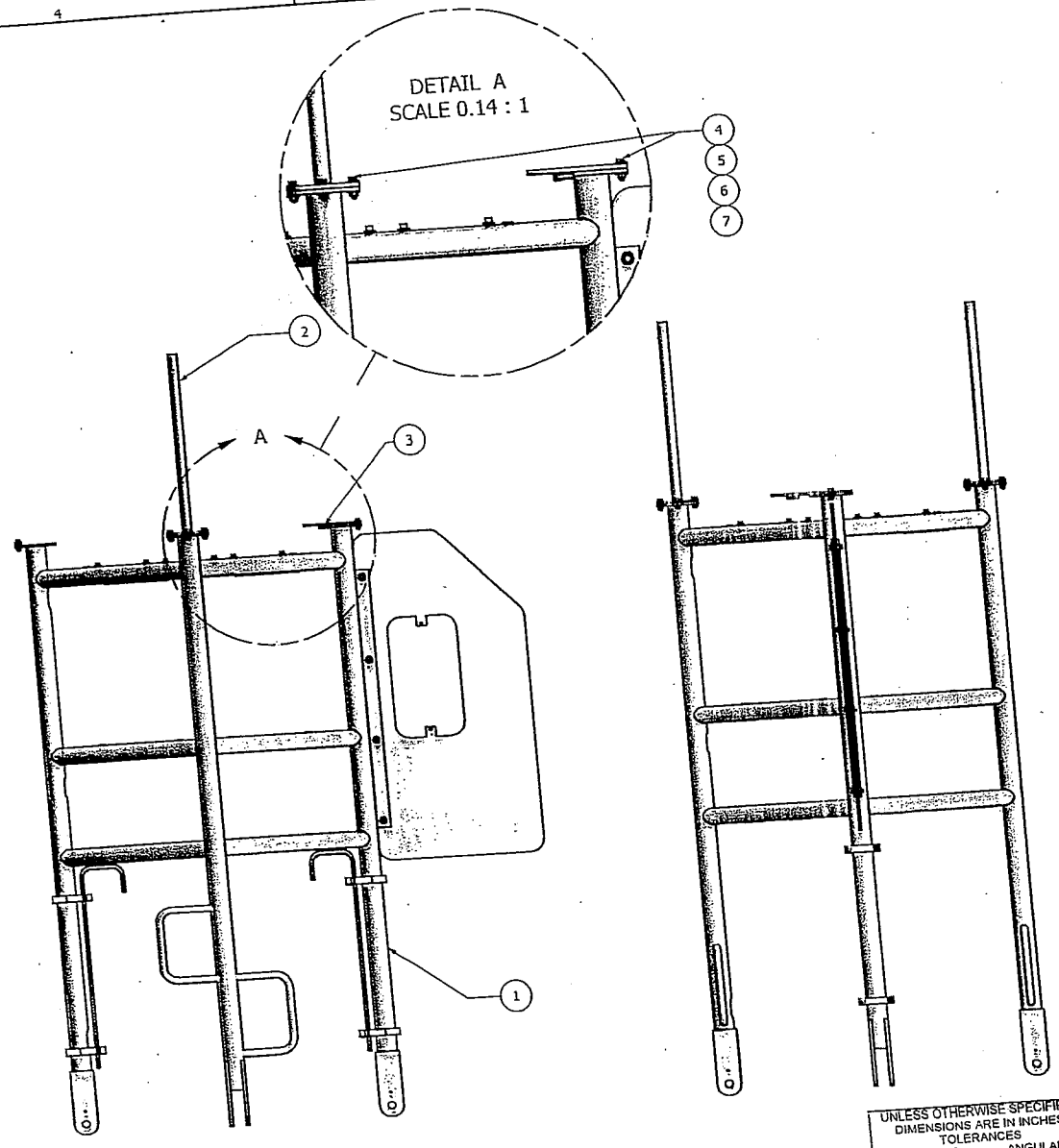

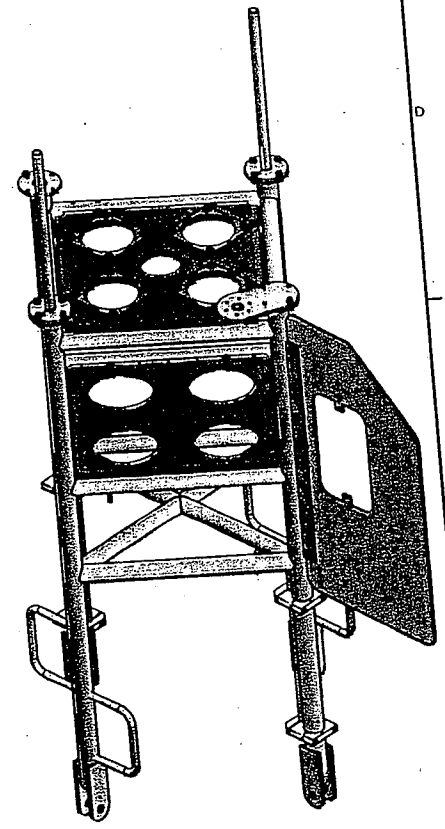

ITEM	QTY	PART NUMBER	DESCRIPTION
7	12	ANSI B18.2.2 - 3/8 - 16	Hex Nut, Nylock
6	24	ANSI B18.22.1 - 3/8 - wide - Type A	Washer A
5	12	ASME B18.21.1 - 3/8 Regular	Helical Spring Lock Washer
4	12	ANSI B18.2.1 - 3/8-16 UNC - 1.5 Lg.	Hex Cap Screw
3	1	02.3F01205-001	RF Antenna Mount
2	2	02.3F01204-001	Wind Sensor Mount
1	1	02.3F01201-001	2.3 Meter STD Bouy Basic Mast Assembly

Parts List

UNLESS OTHERWISE SPECIFIED:
DIMENSIONS ARE IN INCHES
TOLERANCES
DECIMALS .XX +/- .05 .XXX +/-.010
ANGULAR +/- .5
DO NOT SCALE DRAWING

DRAWN	chuckc	1/8/2008
CHECKED		
QA		
MFG		
APPROVED		

NATIONAL DATA BUOY CENTER
John C. Stennis Space Center
Stennis Space Center, Mississippi,39529

TITLE
2.3 Meter Standard Buoy Mast Mechanical Assembly

SIZE C | DWG NO 02.3F01200 | REV
SCALE | SHEET 1 OF 3

2.3 METER STANDARD BUOY MAST MECHANICAL ASSEMBLY -001

WEATHER CONFIGURATION (WEAH)

WEATHER/DART CONFIGURATION (WEAH/DART)

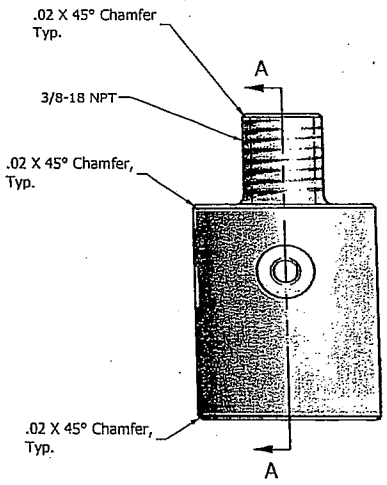

ALT. FRONT VIEW

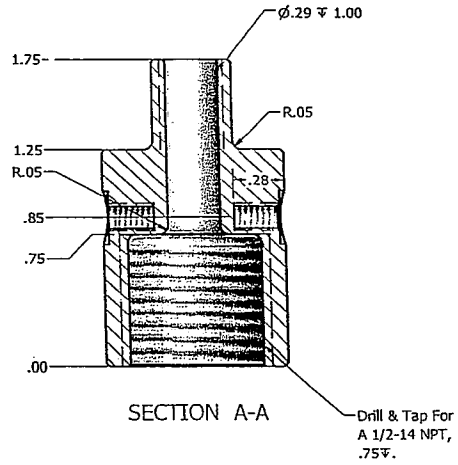

SECTION A-A

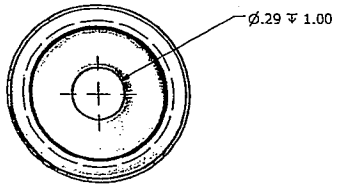

TOP VIEW

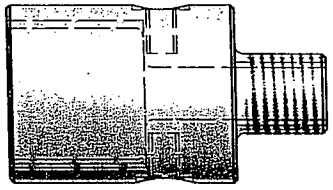

SIDE VIEW

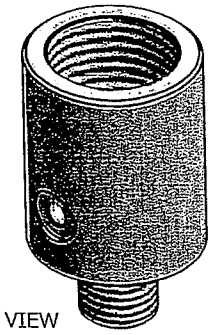

ISOMETRIC VIEW

WELL TEST PORT ASSEMBLY -001

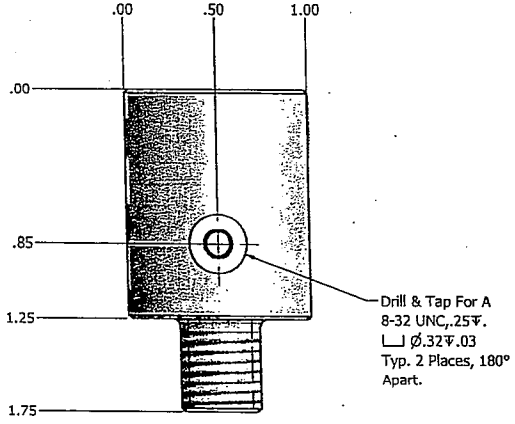

FRONT VIEW

UNLESS OTHERWISE SPECIFIED: DIMENSIONS ARE IN INCHES TOLERANCES DECIMALS .XX +/- .05 .XXX +/-.010 ANGULAR +/- .5 DO NOT SCALE DRAWING	DRAWN chuckc	5/28/2008	NATIONAL DATA BUOY CENTER John C. Stennis Space Center Stennis Space Center, Mississippi,39529
	CHECKED		TITLE
	QA		WELL TEST PORT ASSEMBLY
	MFG		
	APPROVED		SIZE C / DWG NO 02.3F01189 / REV
			SCALE / SHEET 2 OF 2

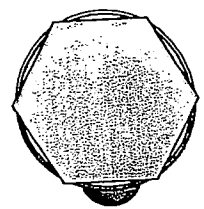

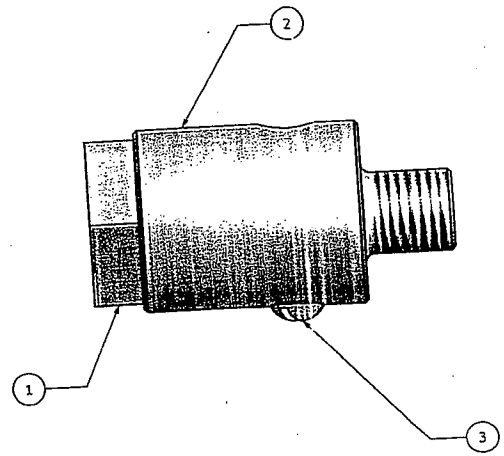

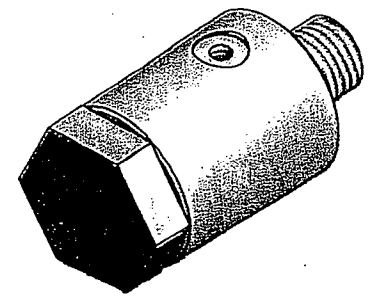

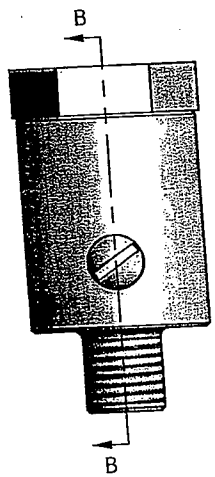

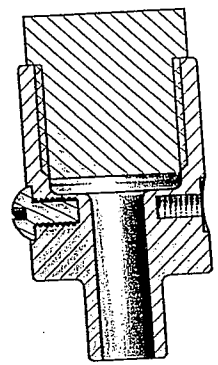

SECTION B-B
SCALE 2/1

ITEM	QTY	PART NUMBER	CONTROL #	DESCRIPTION
3	1	McMaster-Carr #93143A190		6-32 X .25 lg. Aluminim Screw
2	1	02.3F01189-001-Sht. 2	8417	BAR, ROUND, ALUMINUM 5086, 1.0 DIA X 1.75 LG
1	1	McMaster-Carr #48335K155		Delrin, Vent Plug, 1/2" NPT

Parts List

UNLESS OTHERWISE SPECIFIED:
DIMENSIONS ARE IN INCHES
TOLERANCES
DECIMALS .XX +/- .05 .XXX +/-.010
ANGULAR +/- .5
DO NOT SCALE DRAWING

DRAWN	chuckc	5/28/2008
CHECKED		
QA		
MFG		
APPROVED		

NATIONAL DATA BUOY CENTER
John C. Stennis Space Center
Stennis Space Center, Mississippi,39529

TITLE
WELL TEST PORT ASSEMBLY

SIZE C | DWG NO 02.3F01189 | REV

SCALE | SHEET 1 OF 2

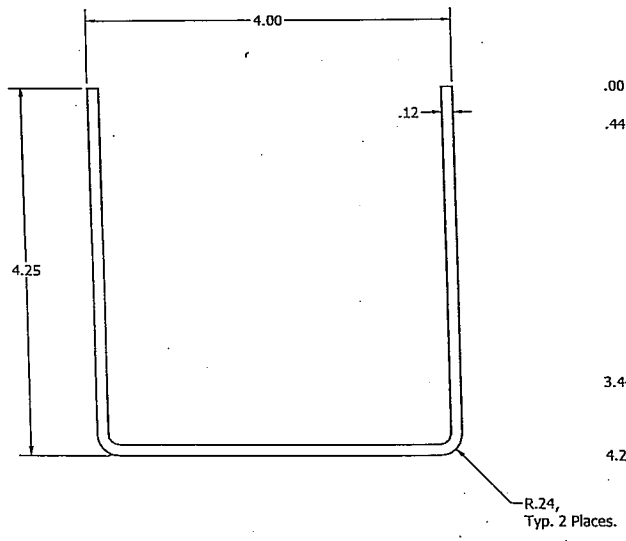

SIDE VIEW 1

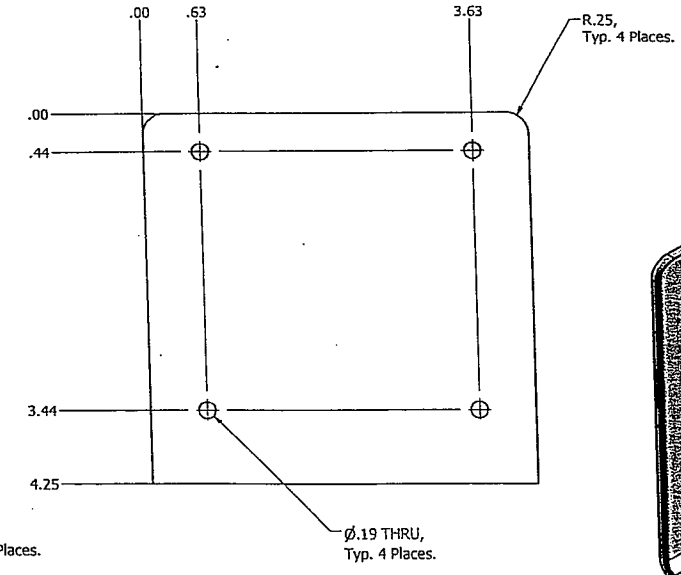

SIDE VIEW 2

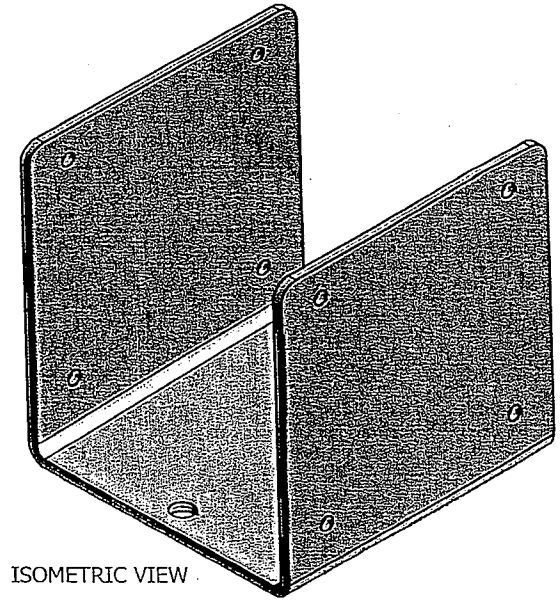

ISOMETRIC VIEW

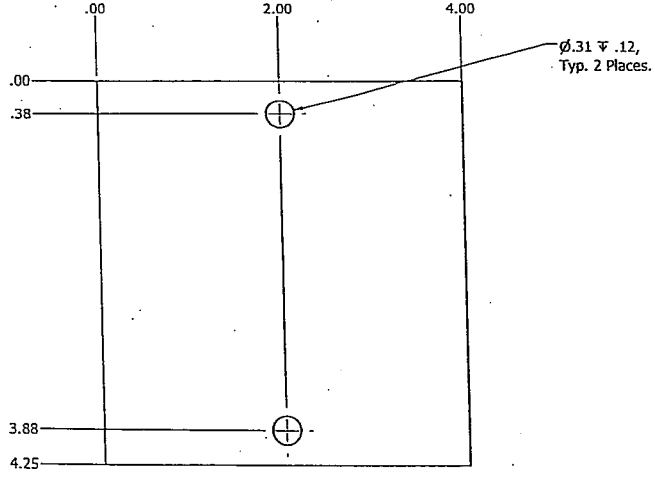

BOTTOM VIEW

BAROMETER BRACKET -001

ITEM	QTY	PART NUMBER	CONTROL #	DESCRIPTION
1	1	-	8408	PLATE, ALUMINUM 5086, 0.125 X 4.0 X 4.25

Parts List

UNLESS OTHERWISE SPECIFIED:
DIMENSIONS ARE IN INCHES
TOLERANCES
DECIMALS .XX +/- .05 .XXX +/-.010
ANGULAR +/- .5
DO NOT SCALE DRAWING

DRAWN	chuckc	10/29/2007
CHECKED		
QA		
MFG		
APPROVED		

NATIONAL DATA BUOY CENTER
John C. Stennis Space Center
Stennis Space Center, Mississippi,39529

TITLE
BAROMETER BRACKET

SIZE	DWG NO	REV
C	02.3F01187	

SCALE

SHEET 1 OF 1

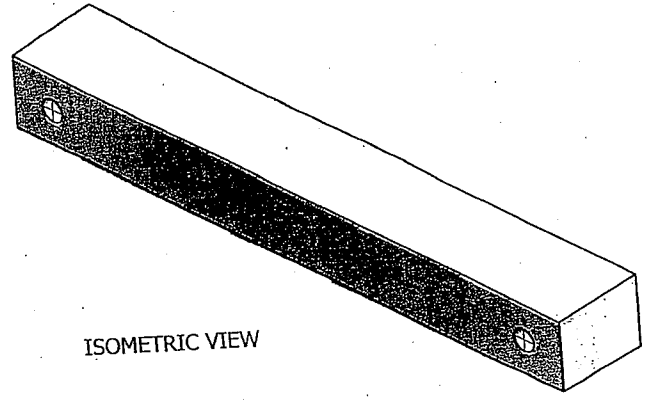

ISOMETRIC VIEW

WAVES ELECTRONICS MOUNT -001

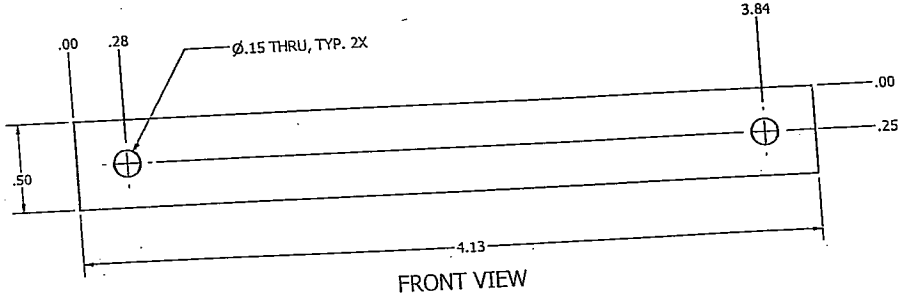

FRONT VIEW

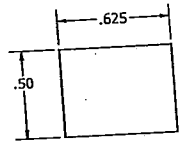

SIDE VIEW

ITEM	QTY	PART NUMBER	CONTROL #	DESCRIPTION
1	1	-	7308	SHEET, PVC, GREY, 0.50 X 4.125 X 0.625

Parts List

UNLESS OTHERWISE SPECIFIED:
DIMENSIONS ARE IN INCHES
TOLERANCES
DECIMALS .XX +/- .05 .XXX +/-.010
ANGULAR +/- .5
DO NOT SCALE DRAWING

DRAWN	chuckc	10/31/2007
CHECKED		
QA		
MFG		
APPROVED		

NATIONAL DATA BUOY CENTER
John C. Stennis Space Center
Stennis Space Center, Mississippi,39529

TITLE
WAVES ELECTRONICS MOUNT

SIZE	DWG NO	REV
C	02.3F01185	

SCALE

SHEET 1 OF 1

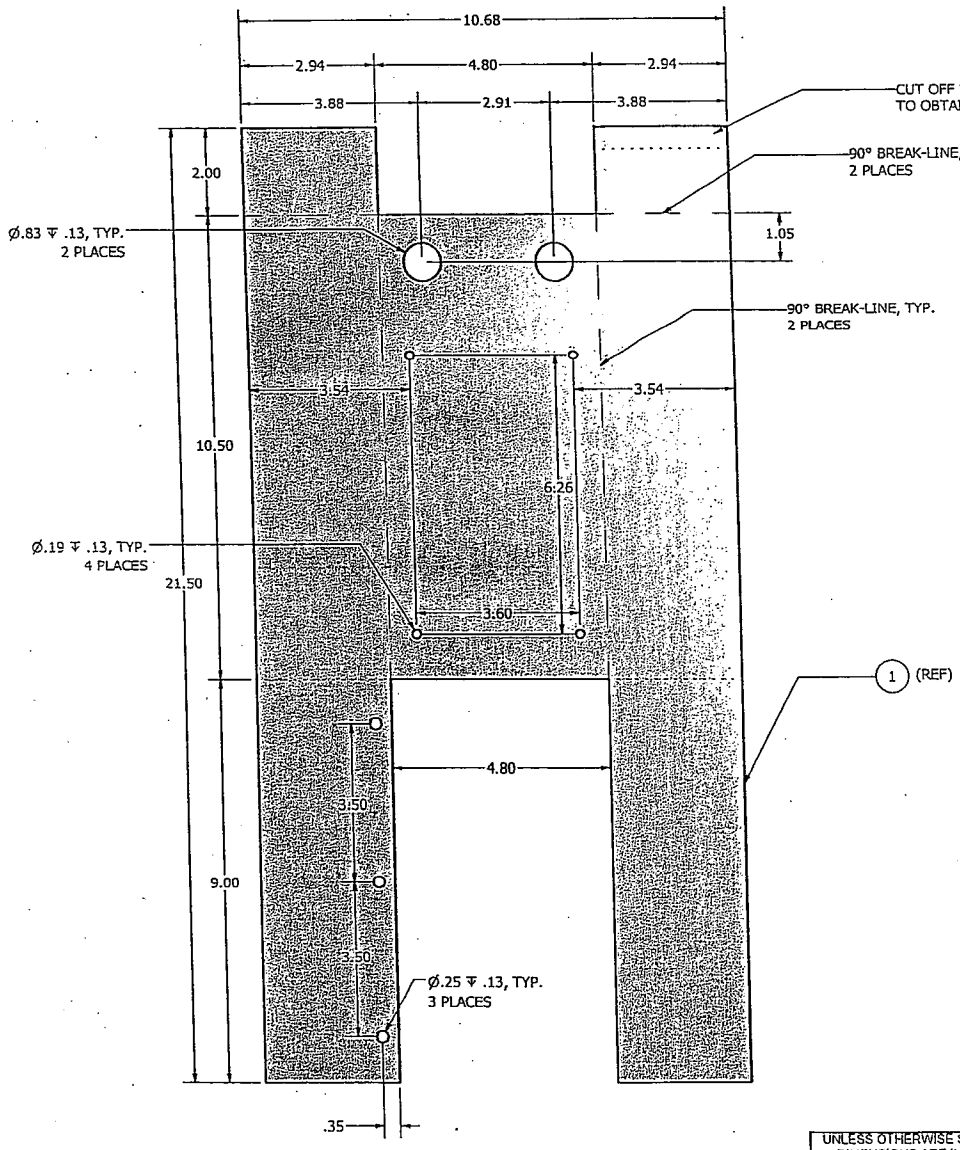

PANEL 1 FLAT VIEW

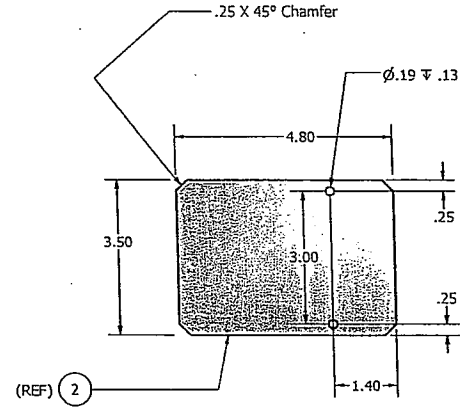

PANEL 2 FLAT VIEW

UNLESS OTHERWISE SPECIFIED: DIMENSIONS ARE IN INCHES TOLERANCES DECIMALS .XX +/- .05 .XXX +/-.010 ANGULAR +/- .5 DO NOT SCALE DRAWING	DRAWN chuckc	10/31/2007	NATIONAL DATA BUOY CENTER John C. Stennis Space Center Stennis Space Center, Mississippi,39529
	CHECKED		TITLE
	QA		WAVES BRACKET
	MFG		
	APPROVED		SIZE C / DWG NO 02.3F01184 / REV
			SCALE / SHEET 2 OF 2

NOTES:
1. See sheet 2 for panel fabrication details.

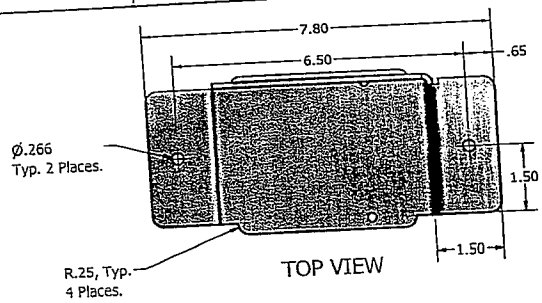

TOP VIEW

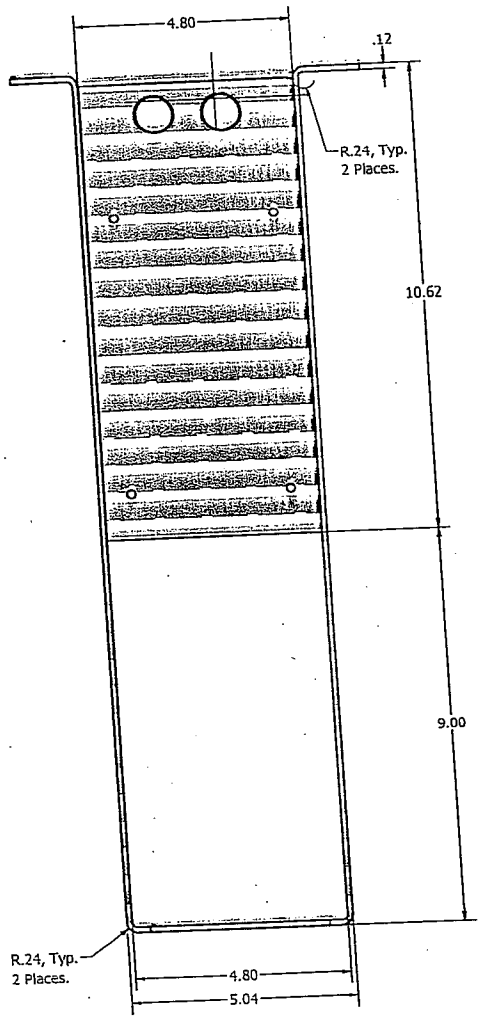

FRONT VIEW

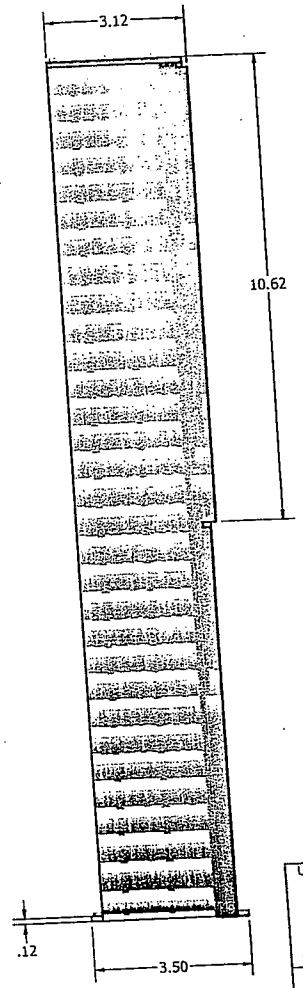

SIDE VIEW

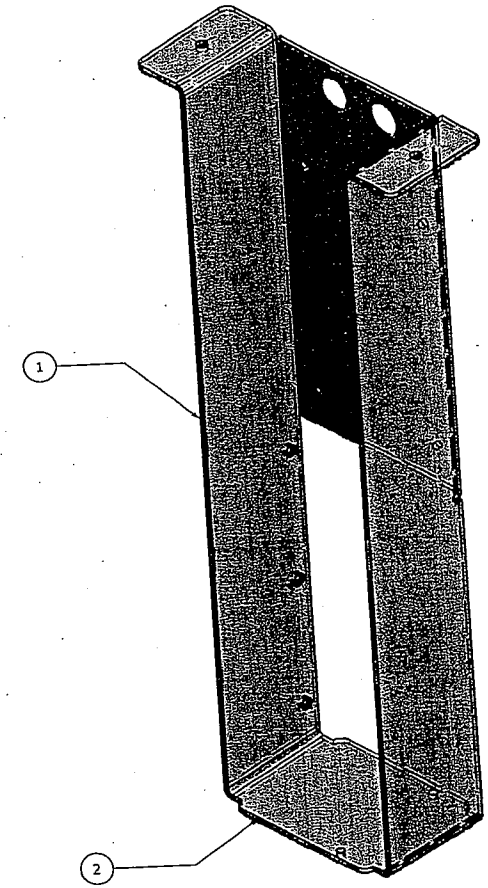

WAVES BRACKET -001

ITEM	QTY	PART NUMBER	CONTROL #	DESCRIPTION
2	1	-	8408	PLATE, ALUMINUM 5086, 0.125 X 4.80 X 3.50
1	1	-	8408	PLATE, ALUMINUM 5086, 0.125 X 21.50 X 10.68

Parts List

UNLESS OTHERWISE SPECIFIED:
DIMENSIONS ARE IN INCHES
TOLERANCES
DECIMALS .XX +/- .05 .XXX +/-.010
ANGULAR +/- .5
DO NOT SCALE DRAWING

DRAWN	chuckc	10/31/2007
CHECKED		
QA		
MFG		
APPROVED		

NATIONAL DATA BUOY CENTER
John C. Stennis Space Center
Stennis Space Center, Mississippi,39529

TITLE
WAVES BRACKET

SIZE	DWG NO	REV
C	02.3F01184	

SCALE

SHEET 1 OF 2

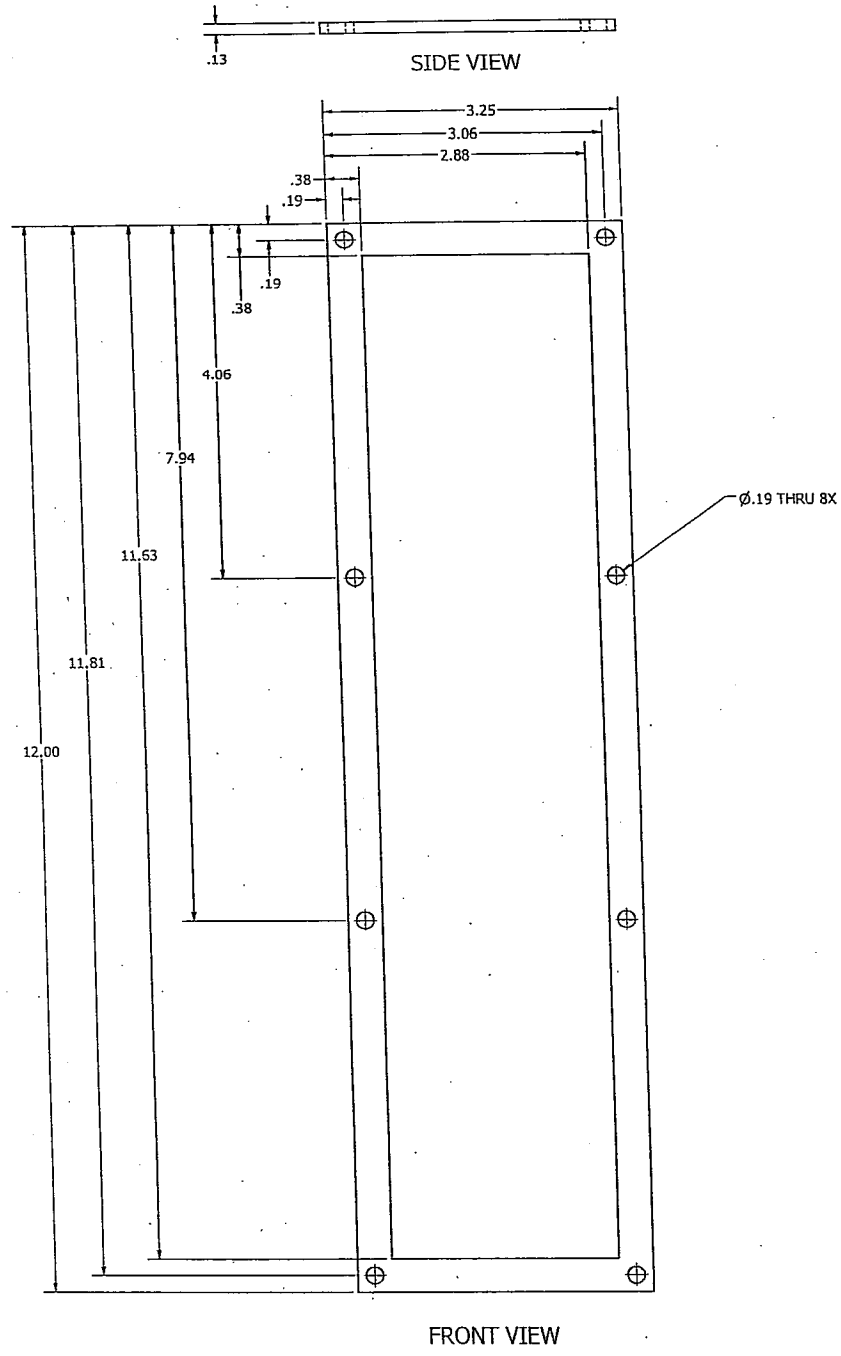

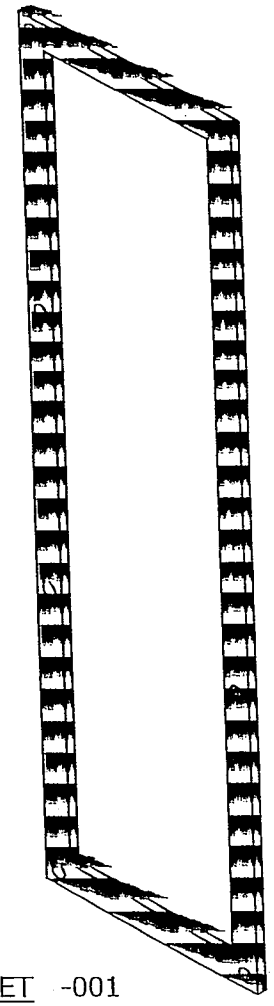

POWER RAIL GASKET -001

ITEM	QTY	PART NUMBER	CONTROL #	DESCRIPTION
1	1	-	2156	GASKET, NEOPRENE, 60 DURO, BLACK, 0.125 X 3.25 X 12.00 (1/8 THK)

Parts List

UNLESS OTHERWISE SPECIFIED:
DIMENSIONS ARE IN INCHES
TOLERANCES
DECIMALS .XX +/- .05 .XXX +/-.010
ANGULAR +/- .5
DO NOT SCALE DRAWING

DRAWN T. RUTLEDGE 10/5/2007
CHECKED
QA
MFG
APPROVED

NATIONAL DATA BUOY CENTER
John C. Stennis Space Center
Stennis Space Center, Mississippi,39529

TITLE
POWER RAIL GASKET

SIZE C
DWG NO 02.3F01183
REV
SCALE
SHEET 1 OF 1

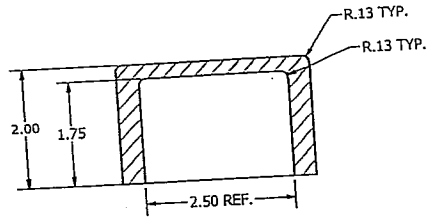

SECTION A-A

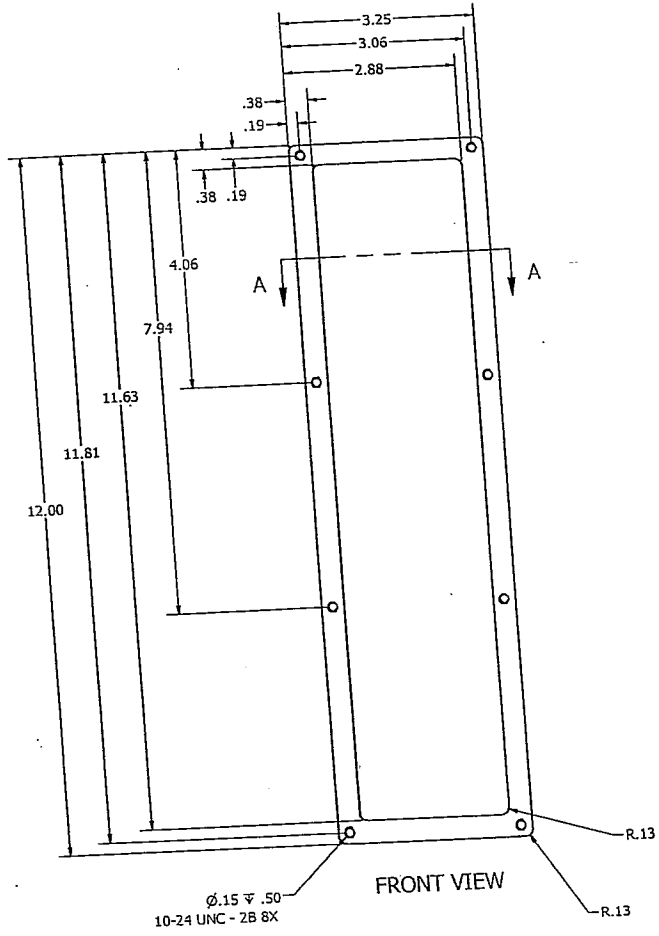

FRONT VIEW

ISOMETRIC VIEW

POWER RAIL COVER -001

ITEM	QTY	PART NUMBER	CONTROL #	DESCRIPTION
1	1	ALL PLASTICS & FIBERGLASS ACETAL RESIN BLACK	NSN	SHEET, ACETAL RESIN, BLK, 2.00 X 3.25 X 12.00

Parts List

UNLESS OTHERWISE SPECIFIED:
DIMENSIONS ARE IN INCHES
TOLERANCES
DECIMALS .XX +/- .05 .XXX +/-.010
ANGULAR +/- .5
DO NOT SCALE DRAWING

DRAWN	T. RUTLEDGE	10/5/2007
CHECKED		
QA		
MFG		
APPROVED		

NATIONAL DATA BUOY CENTER
John C. Stennis Space Center
Stennis Space Center, Mississippi,39529

TITLE
POWER RAIL COVER

SIZE C | DWG NO 02.3F01182 | REV

SCALE | SHEET 1 OF 1

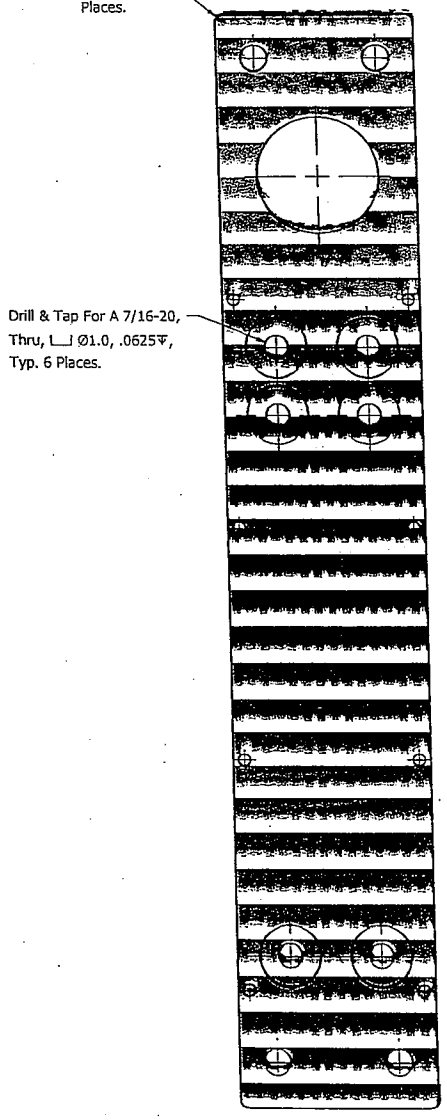

FRONT VIEW

SIDE VIEW

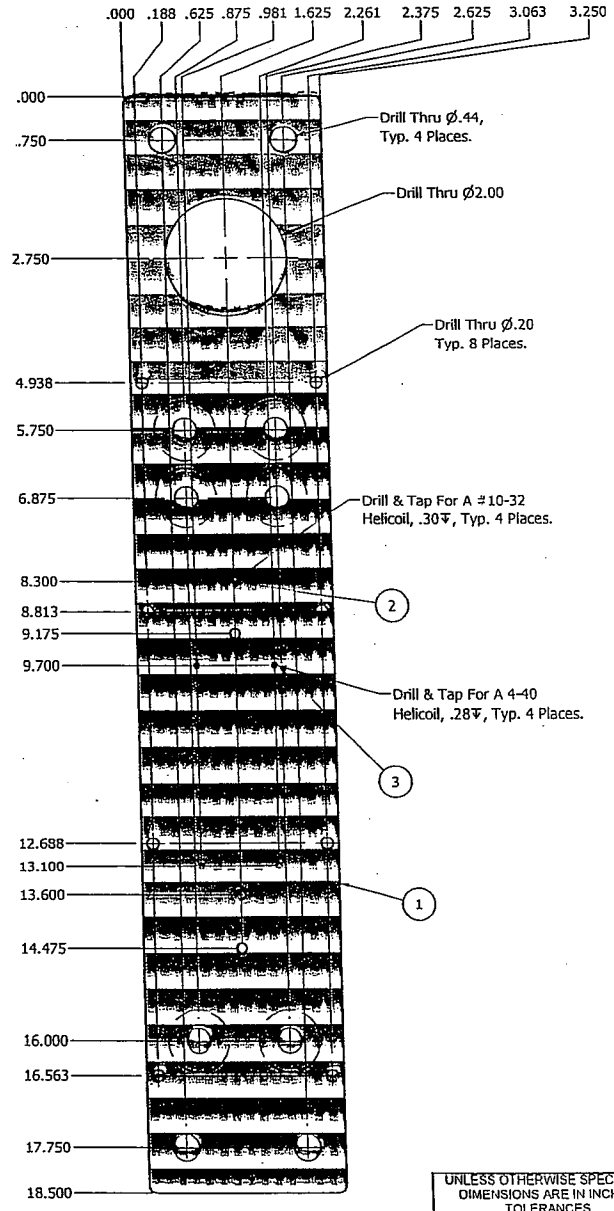

BACK VIEW

FRONT ISOMETRIC VIEW

BACK ISOMETRIC VIEW

POWER RAIL BASE -001

ITEM	QTY	PART NUMBER	CONTROL #	DESCRIPTION
3	4	McMASTER-CARR 91732A701	NSN	HELICOIL, 4-40 x 0.250 Lg.
2	4	McMASTER-CARR 91732A231	NSN	HELICOIL, 10-32 x 0.285 Lg.
1	1	ALL PLASTICS & FIBERGLASS ACETAL RESIN BLACK	NSN	SHEET, ACETAL RESIN, BLK, 0.38 X 3.25 X 18.50 LG.

Parts List

UNLESS OTHERWISE SPECIFIED:
DIMENSIONS ARE IN INCHES
TOLERANCES
DECIMALS .XX +/- .05 .XXX +/-.010
ANGULAR +/- .5
DO NOT SCALE DRAWING

DRAWN	chuckc	10/5/2007
CHECKED		
QA		
MFG		
APPROVED		

NATIONAL DATA BUOY CENTER
John C. Stennis Space Center
Stennis Space Center, Mississippi,39529

TITLE
POWER RAIL BASE

SIZE C | DWG NO 02.3F01181 | REV

SCALE | SHEET 1 OF 1

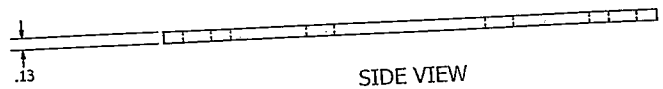

SIDE VIEW

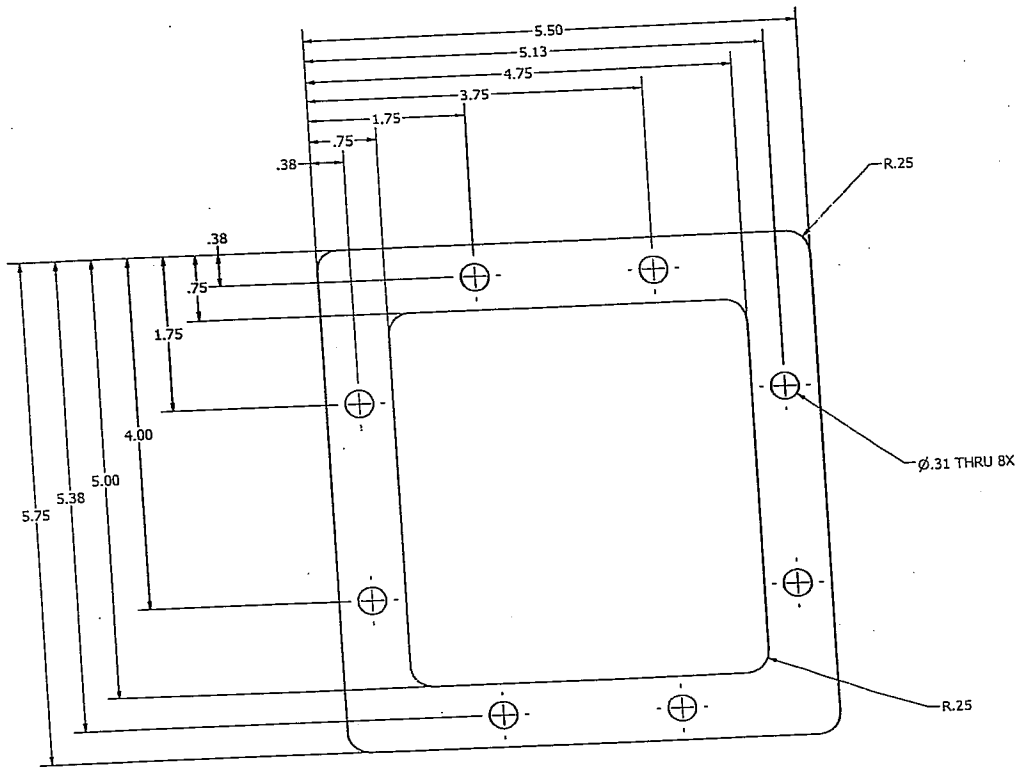

FRONT VIEW

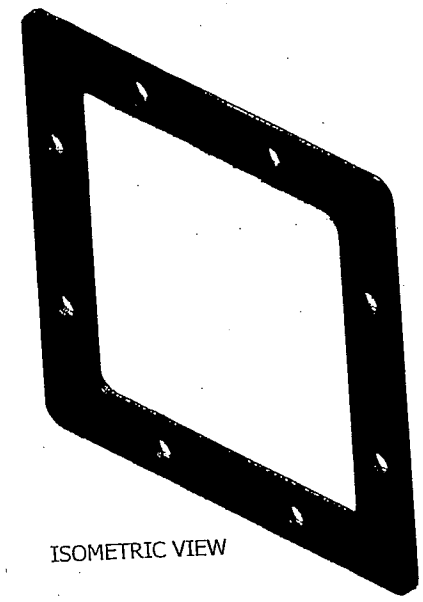

ISOMETRIC VIEW

UPPER WELL FACE PLATE GASKET -001

ITEM	QTY	PART NUMBER	CONTROL #	DESCRIPTION
1	1	McMaster-Carr #8647K41	2156	GASKET, NEOPRENE 60 DURO, 0.125 X 5.50 X 5.75

Parts List

UNLESS OTHERWISE SPECIFIED:
DIMENSIONS ARE IN INCHES
TOLERANCES
DECIMALS .XX +/- .05 .XXX +/-.010
ANGULAR +/- .5
DO NOT SCALE DRAWING

DRAWN	T. RUTLEDGE	10/5/2007
CHECKED		
QA		
MFG		
APPROVED		

NATIONAL DATA BUOY CENTER
John C. Stennis Space Center
Stennis Space Center, Mississippi,39529

TITLE
UPPER WELL FACE PLATE GASKET

SIZE C | DWG NO 02.3F01180 | REV

SCALE | SHEET 1 OF 1

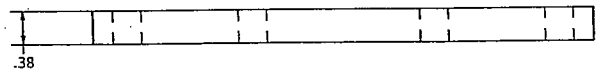

SIDE VIEW

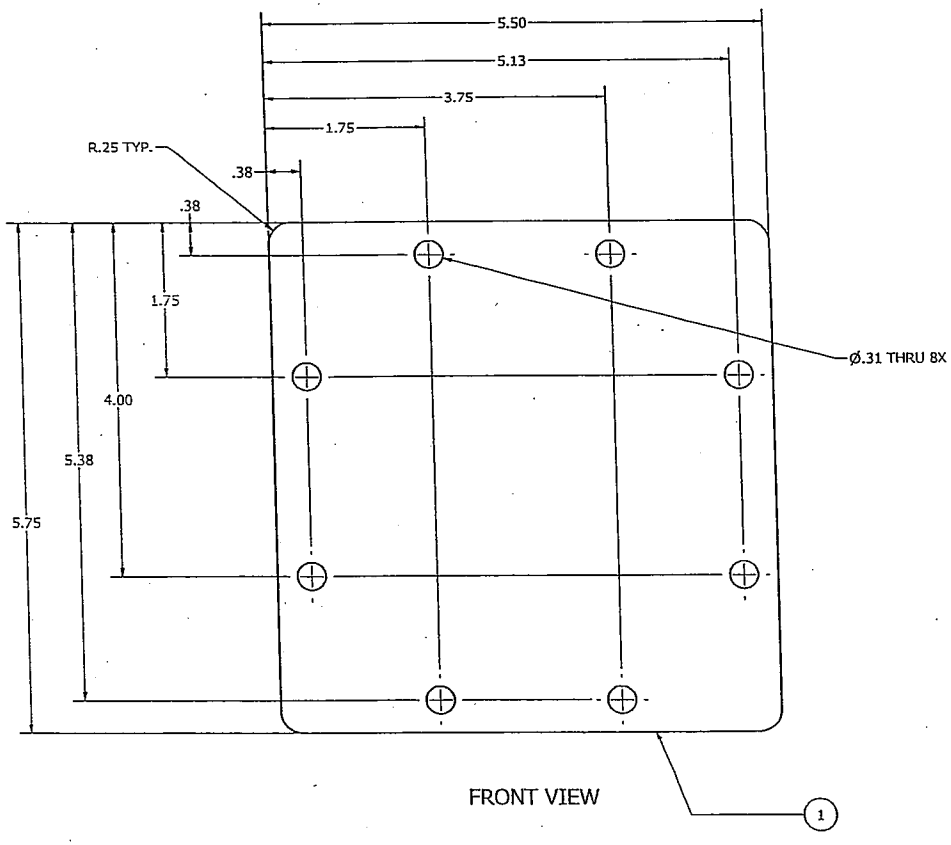

FRONT VIEW

ISOMETRIC VIEW

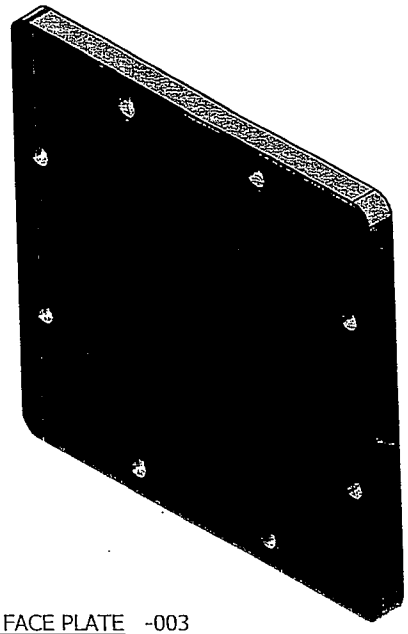

UPPER WELL FACE PLATE -003
PLATE #3

ITEM	QTY	PART NUMBER	CONTROL	DESCRIPTION
1	1	ALL PLASTICS & FIBERGLASS ACETAL RESIN BLACK	NSN	SHEET, ACETAL RESIN BLK, 0 .375 X 5.50 X 5.75

Parts List

UNLESS OTHERWISE SPECIFIED:
DIMENSIONS ARE IN INCHES
TOLERANCES
DECIMALS .XX +/- .05 .XXX +/-.010
ANGULAR +/- .5
DO NOT SCALE DRAWING

DRAWN T. RUTLEDGE 10/5/2007
CHECKED
QA
MFG
APPROVED

NATIONAL DATA BUOY CENTER
John C. Stennis Space Center
Stennis Space Center, Mississippi,39529

TITLE
UPPER WELL FACE PLATE

SIZE C
DWG NO 02.3F01179
REV
SCALE
SHEET 3 OF 3

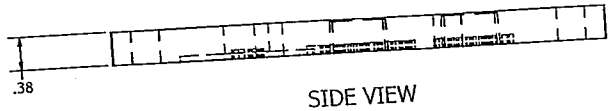

SIDE VIEW

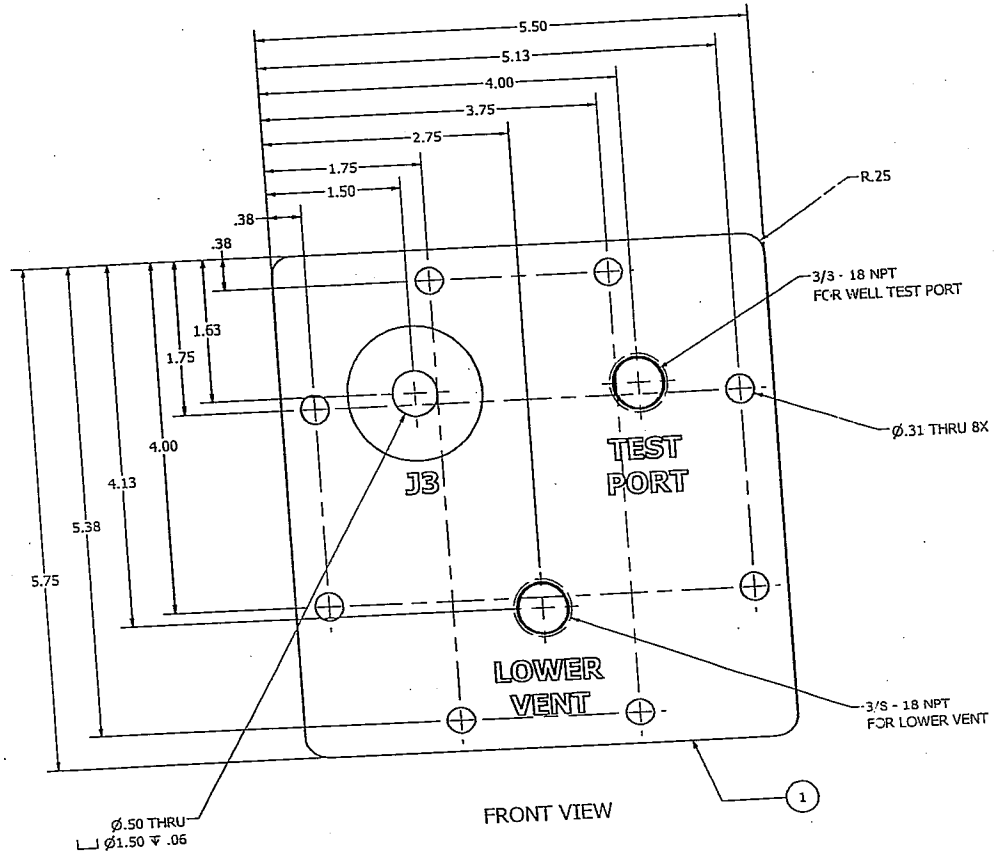

FRONT VIEW

ISOMETRIC VIEW

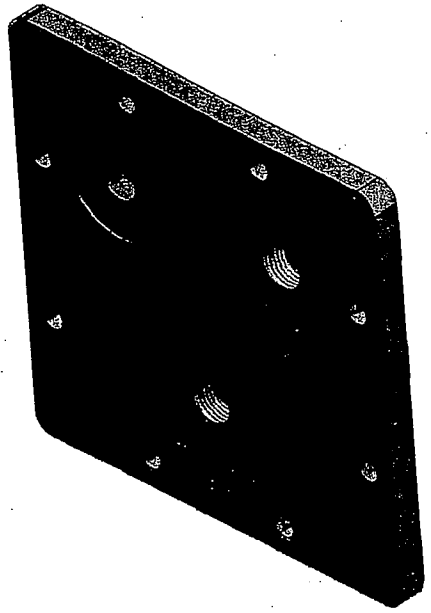

UPPER WELL FACE PLATE -002
PLATE #2

ITEM	QTY	PART NUMBER	CONTROL	DESCRIPTION
1	1	ALL PLASTICS & FIBERGLASS ACETAL RESIN BLACK	NSN	SHEET, ACETAL RESIN BLK, 0 .375 X 5.50 X 5.75

Parts List

UNLESS OTHERWISE SPECIFIED:
DIMENSIONS ARE IN INCHES
TOLERANCES
DECIMALS .XX +/- .05 .XXX +/-.010
ANGULAR +/- .5
DO NOT SCALE DRAWING

DRAWN	T. RUTLEDGE	10/5/2007
CHECKED		
QA		
MFG		
APPROVED		

NATIONAL DATA BUOY CENTER
John C. Stennis Space Center
Stennis Space Center, Mississippi,39529

TITLE
UPPER WELL FACE PLATE

SIZE C | DWG NO 02.3F01179 | REV

SCALE | SHEET 2 OF 3

SIDE VIEW

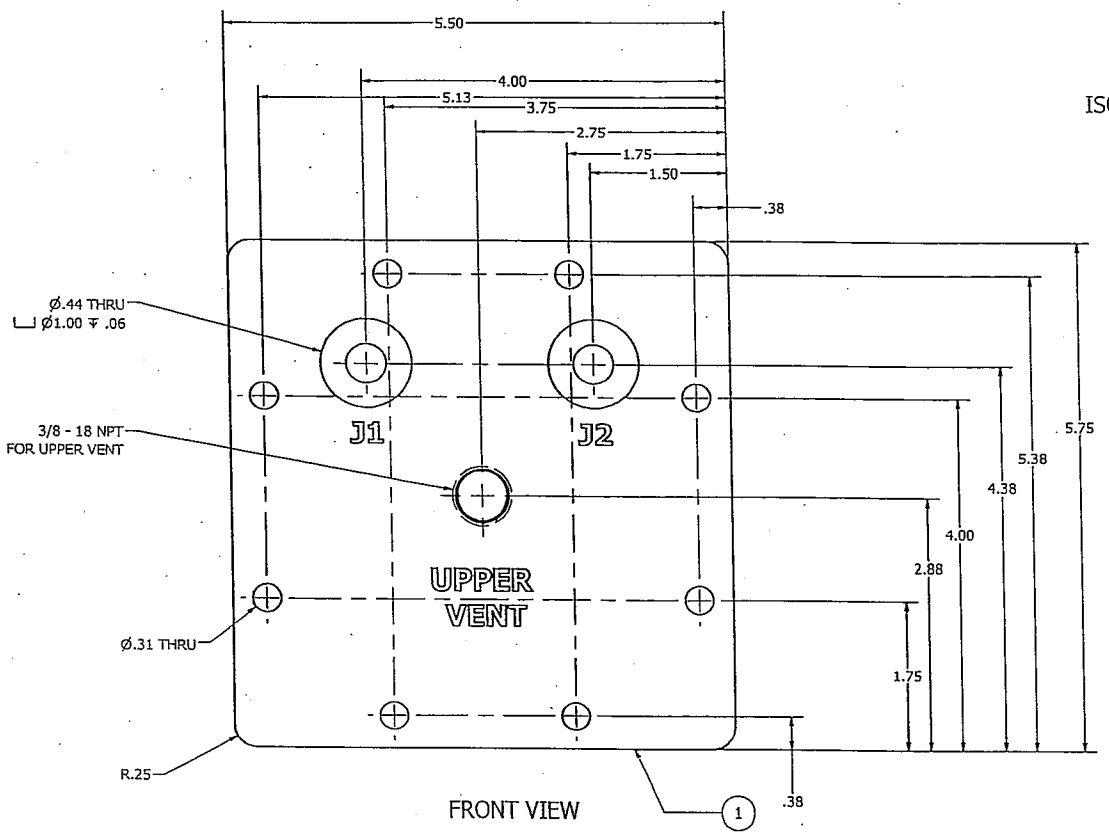

FRONT VIEW

ISOMETRIC VIEW

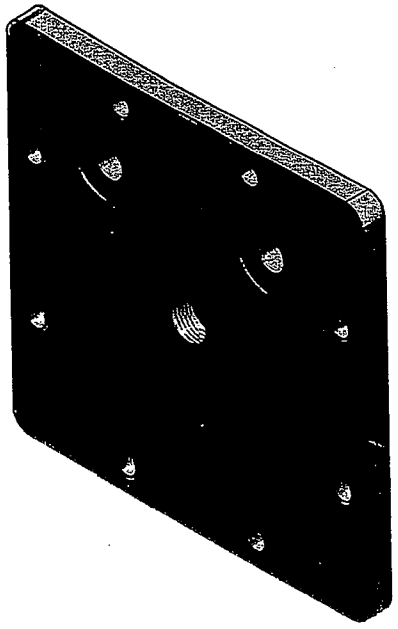

UPPER WELL FACE PLATE -001
PLATE #1

ITEM	QTY	PART NUMBER	CONTROL	DESCRIPTION
1	1	ALL PLASTICS & FIBERGLASS ACETAL RESIN BLACK	NSN	SHEET, ACETAL RESIN BLK, 0 .375 X 5.50 X 5.75

Parts List

UNLESS OTHERWISE SPECIFIED:
DIMENSIONS ARE IN INCHES
TOLERANCES
DECIMALS .XX +/- .05 .XXX +/-.010
ANGULAR +/- .5
DO NOT SCALE DRAWING

DRAWN	T. RUTLEDGE	10/5/2007
CHECKED		
QA		
MFG		
APPROVED		

NATIONAL DATA BUOY CENTER
John C. Stennis Space Center
Stennis Space Center, Mississippi,39529

TITLE
UPPER WELL FACE PLATE

SIZE	DWG NO	REV
C	02.3F01179	

SCALE

SHEET 1 OF 3

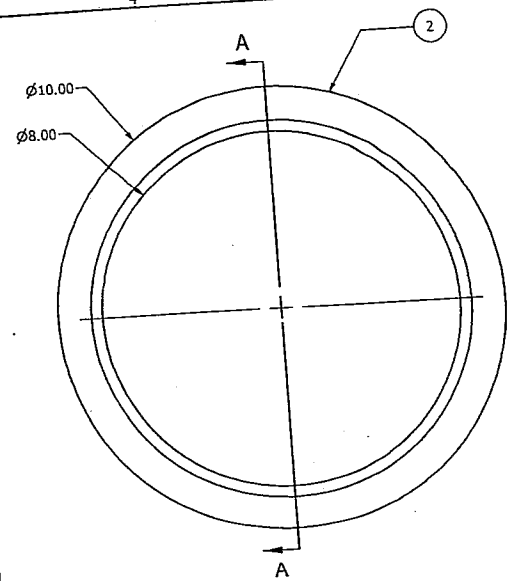

PIPE BOTTOM VIEW

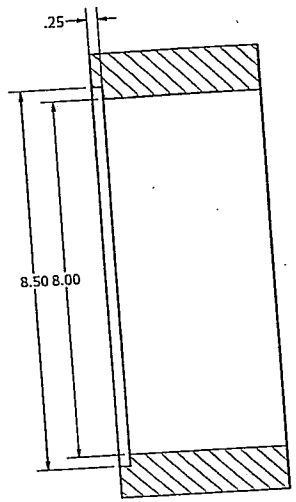

SECTION A-A

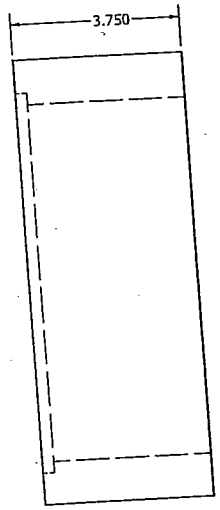

PIPE SIDE VIEW

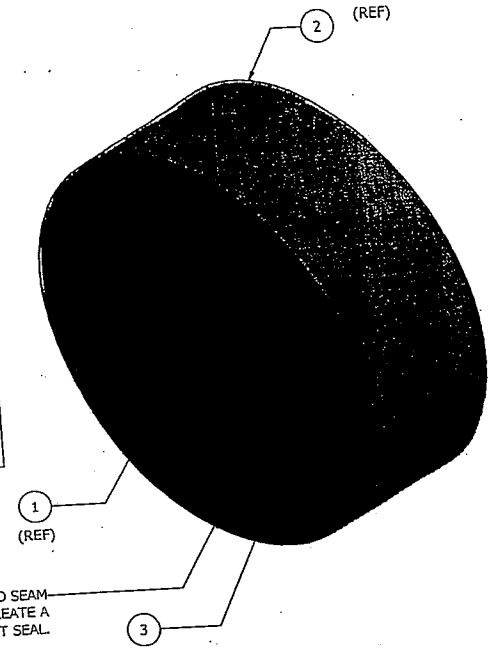

NOTE: APPLY ADHESIVE, ITEM 3, TO SEAM AS NECESSARY TO CREATE A WATER TIGHT SEAL.

BATTERY RACK WELL -001

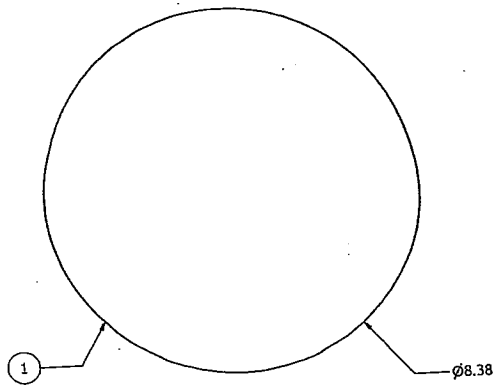

PLATE BOTTOM VIEW

PLATE SIDE VIEW

ITEM	QTY	PART NUMBER	CONTROL #	DESCRIPTION
3	AR	McMASTER CARR 74575A77	1702	ADHESIVE, EPOXY, 2 PART METAL FILLED ALUMINUM, 6.5 OZ TUBE, DEVCON # 19770
2	1	ALL PLASTICS & FIBERGLASS EXTREN 525	NSN	PIPE, FRP, 10.0 OD & 8.0 ID X 3.75 LG, EXTREN
1	1	ALL PLASTICS & FIBERGLASS EXTREN 525	NSN	PLATE, FRP, 8.375 OD X 0.25 THK, EXTREN

Parts List

UNLESS OTHERWISE SPECIFIED:
DIMENSIONS ARE IN INCHES
TOLERANCES
DECIMALS .XX +/- .05 .XXX +/-.010
ANGULAR +/- .5
DO NOT SCALE DRAWING

DRAWN	chuckc	10/31/2007
CHECKED		
QA		
MFG		
APPROVED		

NATIONAL DATA BUOY CENTER
John C. Stennis Space Center
Stennis Space Center, Mississippi,39529

TITLE: BATTERY RACK WELL

SIZE: C | DWG NO: 02.3F01178 | REV

SCALE | SHEET 1 OF 1

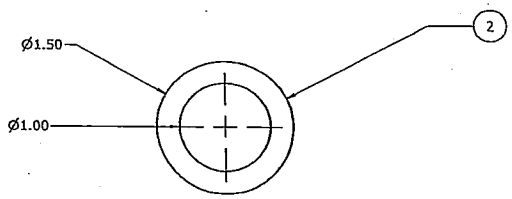

TOP VIEW

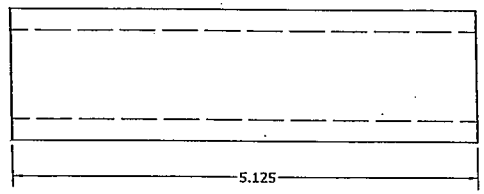

SIDE VIEW

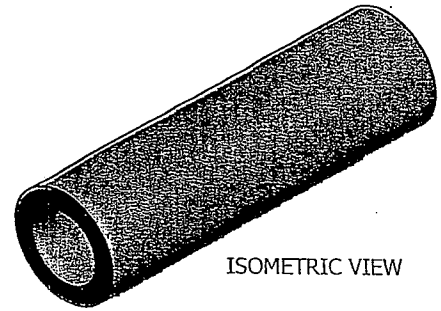

ISOMETRIC VIEW

BATTERY RACK STAND-OFF -002
5.125"

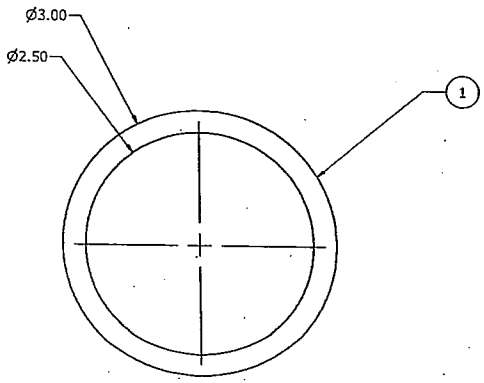

TOP VIEW

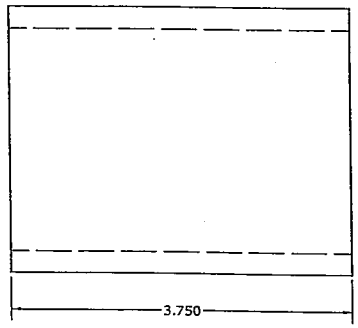

SIDE VIEW

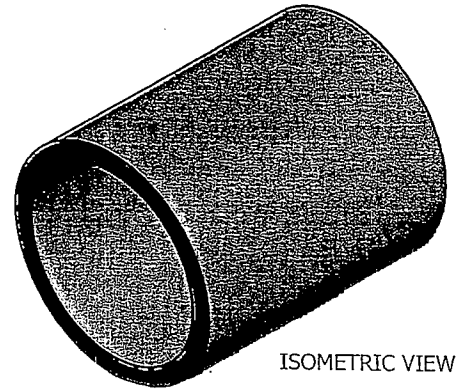

ISOMETRIC VIEW

BATTERY RACK STAND-OFF -001
3.750"

ITEM	QTY	PART NUMBER	CONTROL #	DESCRIPTION
2	1	ALL PLASTICS & FIBERGLASS EXTREN 525	NSN	PIPE, FRP, 1.50 OD. X 5.13 LG., EXTREN
1	1	ALL PLASTICS & FIBERGLASS EXTREN 525	NSN	PIPE, FRP, 3.00 OD. X 3.75 LG., EXTREN

Parts List

UNLESS OTHERWISE SPECIFIED:
DIMENSIONS ARE IN INCHES
TOLERANCES
DECIMALS .XX +/- .05 .XXX +/-.010
ANGULAR +/- .5
DO NOT SCALE DRAWING

DRAWN	chuckc	10/31/2007
CHECKED		
QA		
MFG		
APPROVED		

NATIONAL DATA BUOY CENTER
John C. Stennis Space Center
Stennis Space Center, Mississippi,39529

TITLE
BATTERY RACK STAND-OFF

SIZE	DWG NO	REV
C	02.3F01177	

SCALE

SHEET 1 OF 1

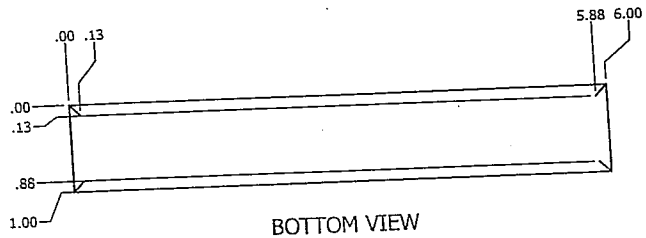

BOTTOM VIEW

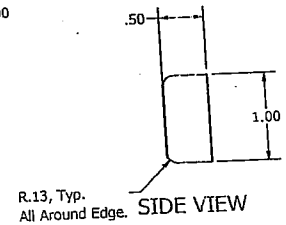

SIDE VIEW

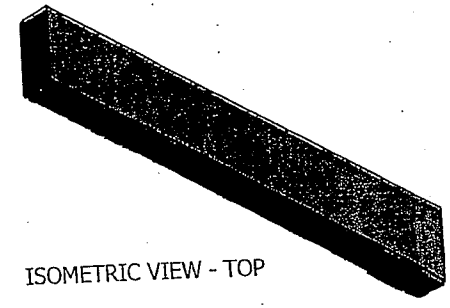

ISOMETRIC VIEW - TOP

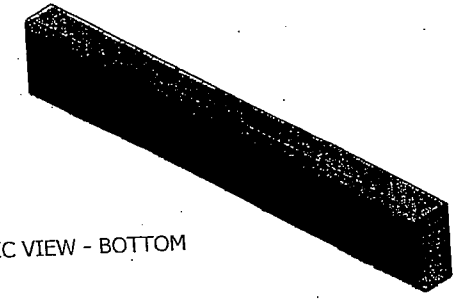

ISOMETRIC VIEW - BOTTOM

BATTERY RACK LIP PLATE -001

ITEM	QTY	PART NUMBER	CONTROL #	DESCRIPTION
1	1	ALL PLASTICS & FIBERGLASS EXTREN 525	NSN	PLATE, FRP, 6.0 X 1.0 X 0.50, EXTREN

Parts List

UNLESS OTHERWISE SPECIFIED:
DIMENSIONS ARE IN INCHES
TOLERANCES
DECIMALS .XX +/- .05 .XXX +/-.010
ANGULAR +/- .5
DO NOT SCALE DRAWING

DRAWN	chuckc	10/31/2007
CHECKED		
QA		
MFG		
APPROVED		

NATIONAL DATA BUOY CENTER
John C. Stennis Space Center
Stennis Space Center, Mississippi,39529

TITLE: BATTERY RACK LIP PLATE

SIZE: C
DWG NO: 02.3F01176
REV:
SCALE:
SHEET 1 OF 1

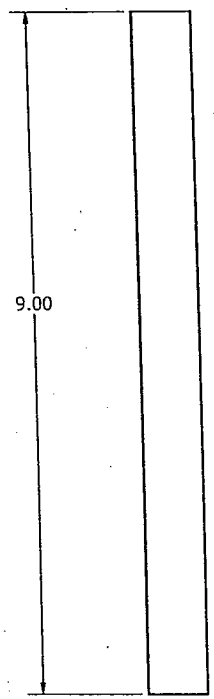

FRONT VIEW

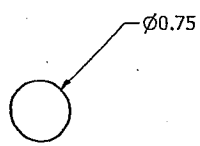

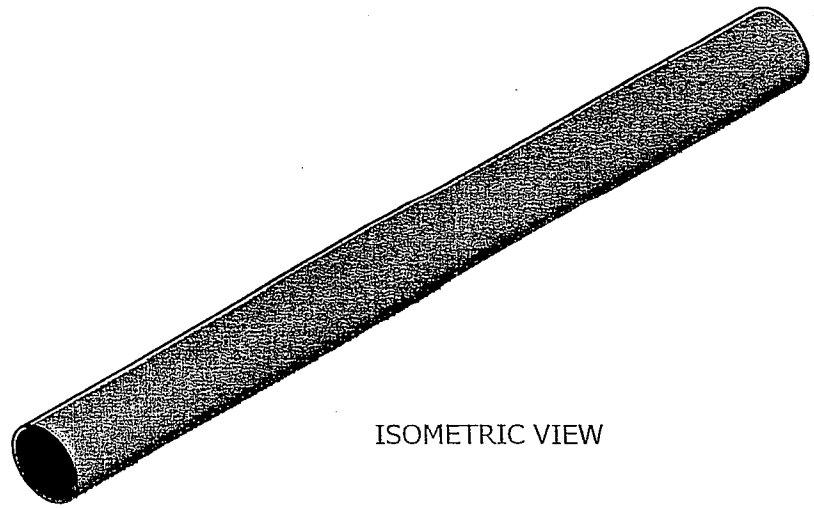

ISOMETRIC VIEW

BATTERY RACK DOWEL -002
9.00"

ITEM	QTY	PART NUMBER	CONTROL #	DESCRIPTION
1	1	ALL PLASTICS & FIBERGLASS EXTREN 525	NSN	BAR, ROUND, FRP, 0.75 DIA. X 9.0 LG., EXTREN

Parts List

UNLESS OTHERWISE SPECIFIED:
DIMENSIONS ARE IN INCHES
TOLERANCES

DECIMALS	ANGULAR
.XX +/- .05	+/- .5
.XXX +/-.010	.

DO NOT SCALE DRAWING

DRAWN	T. RUTLEDGE	10/1/2007
CHECKED		
QA		
MFG		
APPROVED		

NATIONAL DATA BUOY CENTER
John C. Stennis Space Center
Stennis Space Center, Mississippi,39529

TITLE
BATTERY RACK DOWEL

SIZE	DWG NO	REV
B	02.3F01175	

SCALE

SHEET 2 OF 2

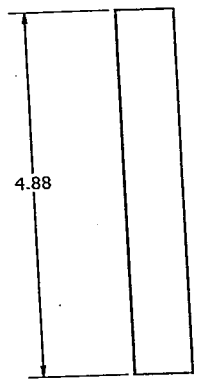

FRONT VIEW

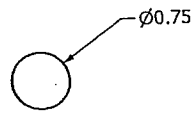

BOTTOM VIEW

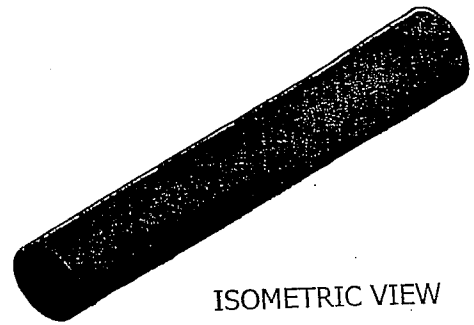

ISOMETRIC VIEW

BATTERY RACK DOWEL -001
4.88"

ITEM	QTY	PART NUMBER	CONTROL #	DESCRIPTION
1	1	ALL PLASTICS & FIBERGLASS EXTREN 525	NSN	BAR, ROUND, FRP, 0.75 DIA X 4.88 LG., EXTREN

Parts List

UNLESS OTHERWISE SPECIFIED:
DIMENSIONS ARE IN INCHES
TOLERANCES
DECIMALS .XX +/- .05 .XXX +/-.010
ANGULAR +/- .5
DO NOT SCALE DRAWING

DRAWN	T. RUTLEDGE	10/1/2007
CHECKED		
QA		
MFG		
APPROVED		

NATIONAL DATA BUOY CENTER
John C. Stennis Space Center
Stennis Space Center, Mississippi,39529

TITLE
BATTERY RACK DOWEL

SIZE	DWG NO	REV
B	02.3F01175	

SCALE | SHEET 1 OF 2

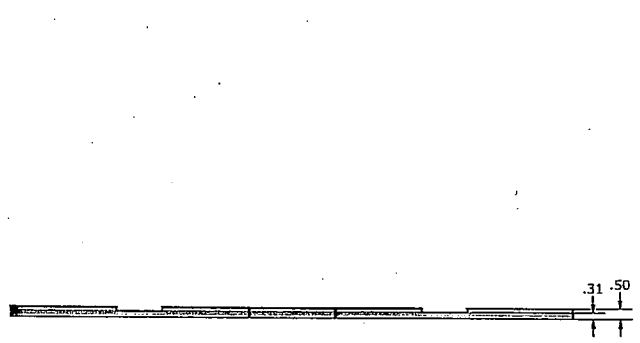

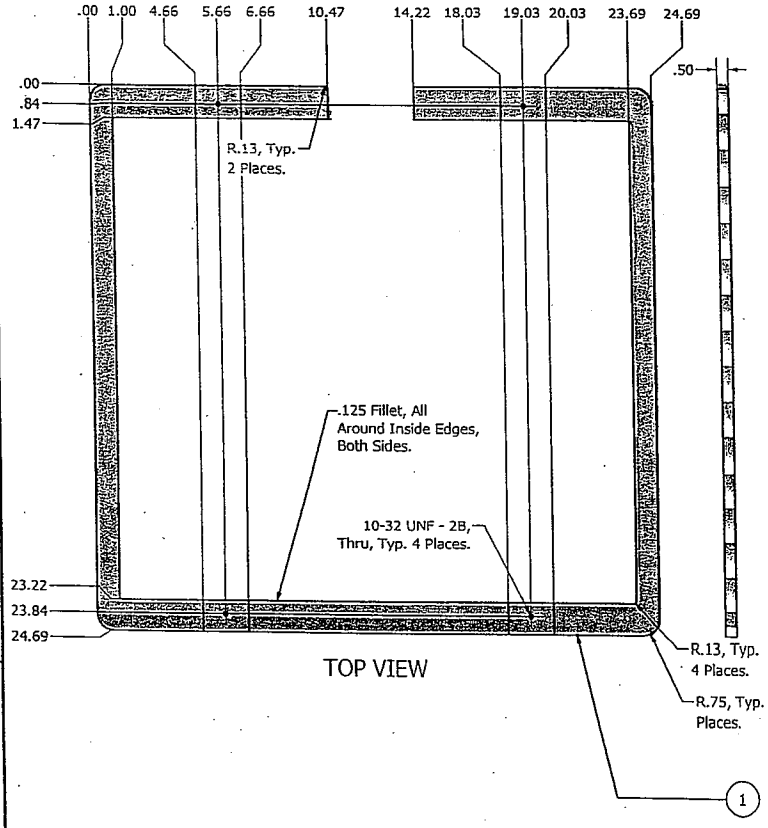

TOP VIEW

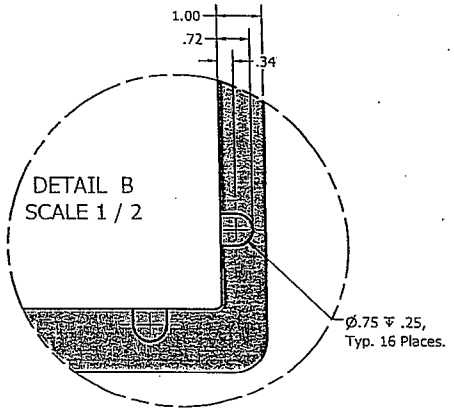

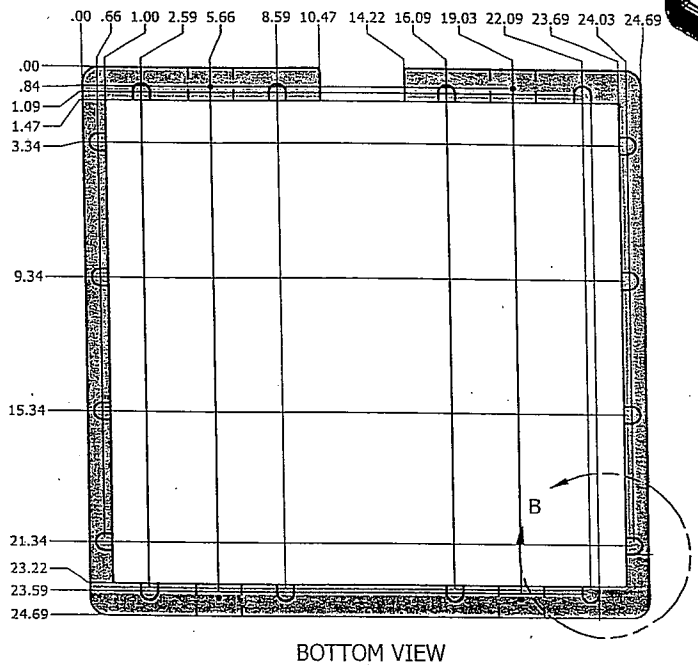

BOTTOM VIEW

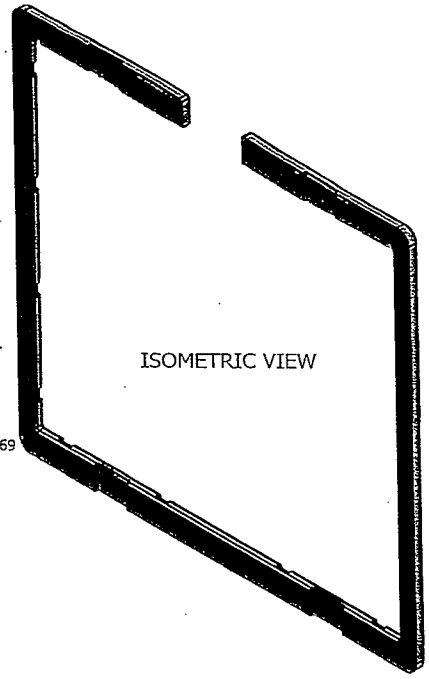

BATTERY RACK SQUEEZE PLATE -002
LOWER

ITEM	QTY	PART NUMBER	CONTROL #	DESCRIPTION
1	1	ALL PLASTICS & FIBERGLASS EXTREN 525	NSN	PLATE, FRP 0.50 X 24.69 X 24.69, EXTREN

Parts List

UNLESS OTHERWISE SPECIFIED:
DIMENSIONS ARE IN INCHES
TOLERANCES
DECIMALS .XX +/- .05 .XXX +/-.010
ANGULAR +/- .5
DO NOT SCALE DRAWING

DRAWN Chuck C 10/5/2007
CHECKED
QA
MFG
APPROVED

NATIONAL DATA BUOY CENTER
John C. Stennis Space Center
Stennis Space Center, Mississippi,39529

TITLE
BATTERY RACK SQUEEZE PLATE

SIZE C
DWG NO 02.3F01174
REV
SCALE
SHEET 2 OF 2

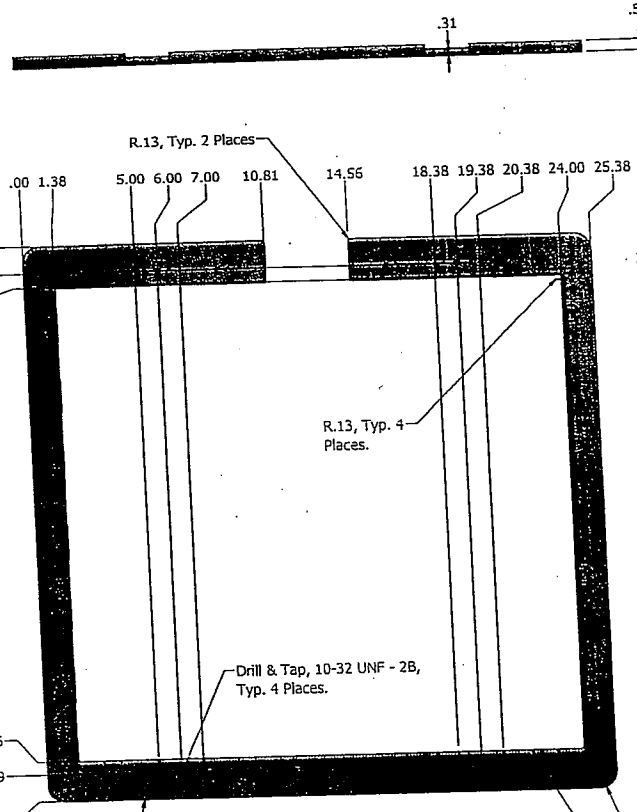

TOP VIEW

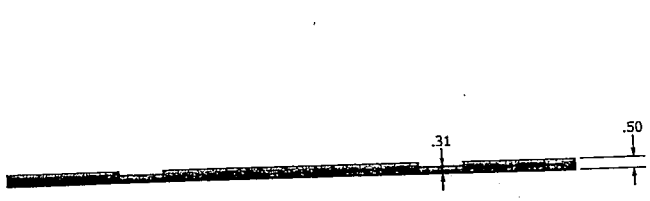

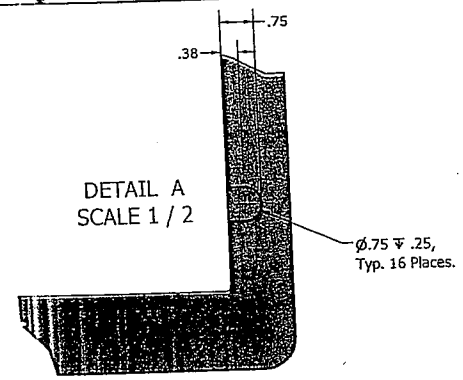

DETAIL A
SCALE 1 / 2

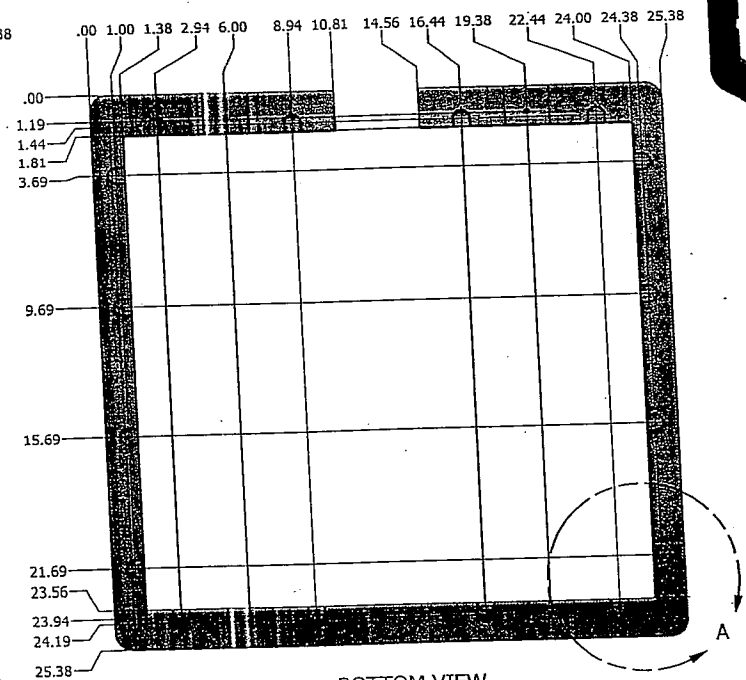

BOTTOM VIEW

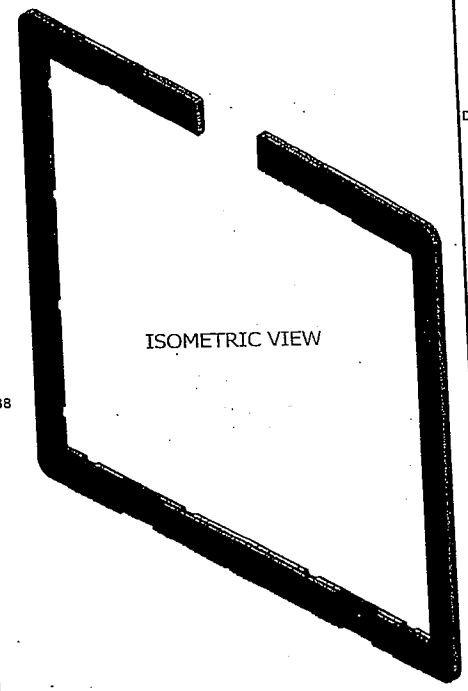

ISOMETRIC VIEW

BATTERY RACK SQUEEZE PLATE -001
UPPER

ITEM	QTY	PART NUMBER	CONTROL #	DESCRIPTION
1	1	ALL PLASTICS & FIBERGLASS EXTREN 525	NSN	PLATE, FRP, 0.50 X 25.38 X 25.38, EXTREN

Parts List

UNLESS OTHERWISE SPECIFIED:
DIMENSIONS ARE IN INCHES
TOLERANCES
DECIMALS .XX +/- .05 .XXX +/-.010
ANGULAR +/- .5
DO NOT SCALE DRAWING

DRAWN	Chuck C	10/5/2007
CHECKED		
QA		
MFG		
APPROVED		

NATIONAL DATA BUOY CENTER
John C. Stennis Space Center
Stennis Space Center, Mississippi,39529

TITLE
BATTERY RACK SQUEEZE PLATE

SIZE	DWG NO	REV
C	02.3F01174	

SCALE
SHEET 1 OF 2

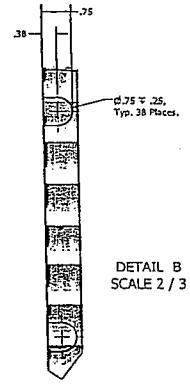

DETAIL B
SCALE 2 / 3

ISOMETRIC VIEW

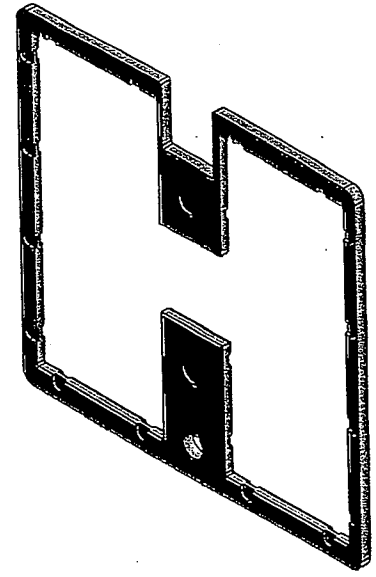

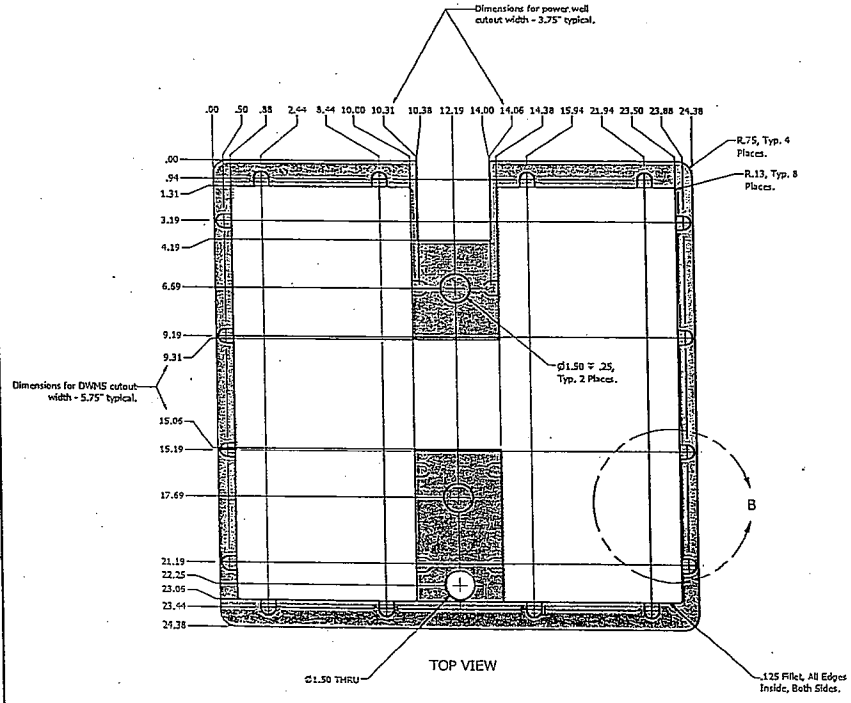

TOP VIEW

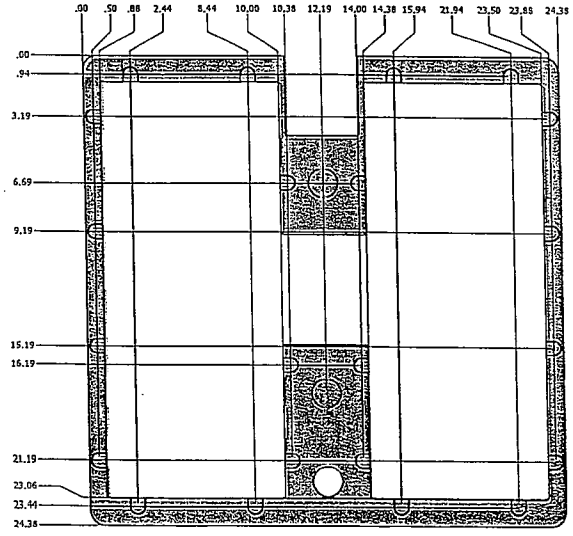

BOTTOM VIEW

BATTERY RACK KEEPER PLATE -002
LOWER

ITEM	QTY	PART NUMBER	CONTROL #	DESCRIPTION
1	1	ALL PLASTICS & FIBERGLASS EXTEREN 525	7569	PLATE, FRP, 24.38 X 24.38 X 0.75, EXTREN

Parts List

UNLESS OTHERWISE SPECIFIED
DIMENSIONS ARE IN INCHES
TOLERANCES
DECIMALS .XX +/-.05 .XXX +/-.010
ANGULAR +/-.5
DO NOT SCALE DRAWING

DRAWN chucke 10/5/2007
CHECKED
QA
MFG
APPROVED

NATIONAL DATA BUOY CENTER
John C. Stennis Space Center
Stennis Space Center, Mississippi,39529

TITLE
BATTERY RACK KEEPER PLATE

SIZE D
DWG NO 02.3F01173
REV
SCALE
SHEET 2 OF 2

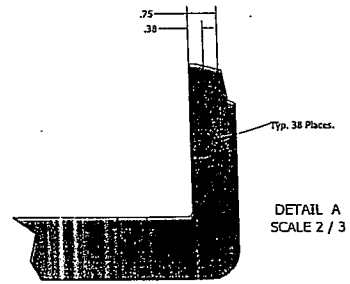

DETAIL A
SCALE 2 / 3

ISOMETRIC VIEW

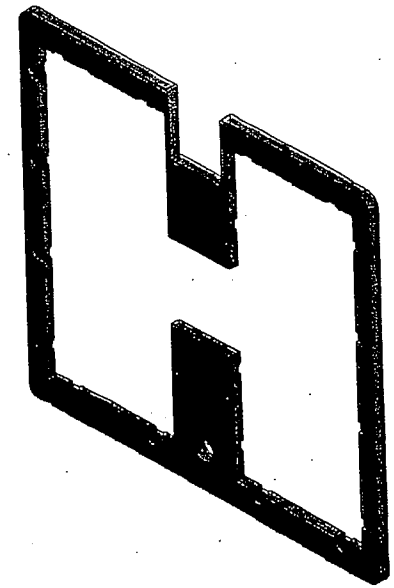

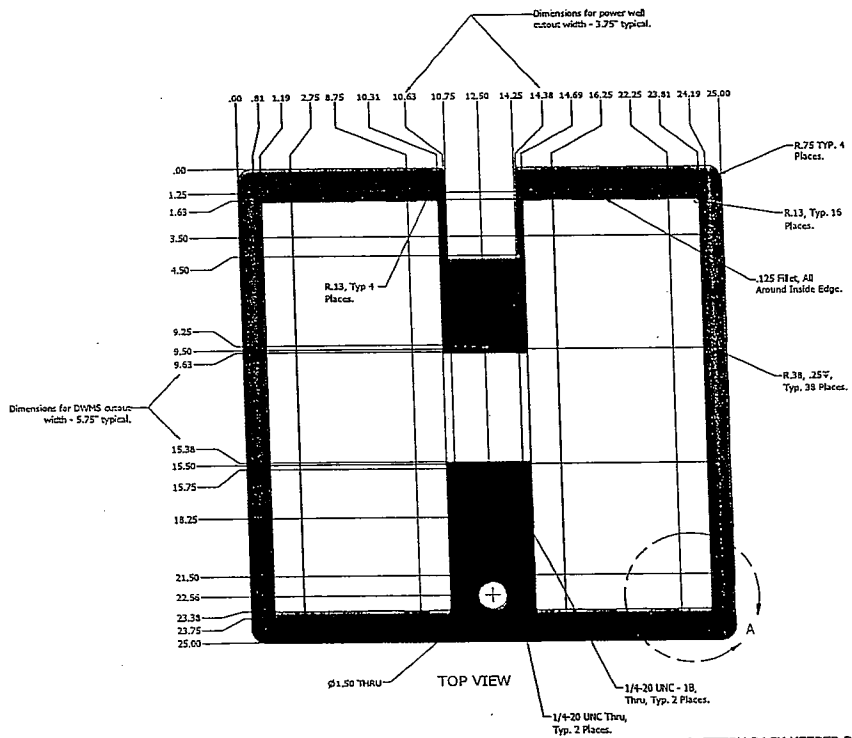

TOP VIEW

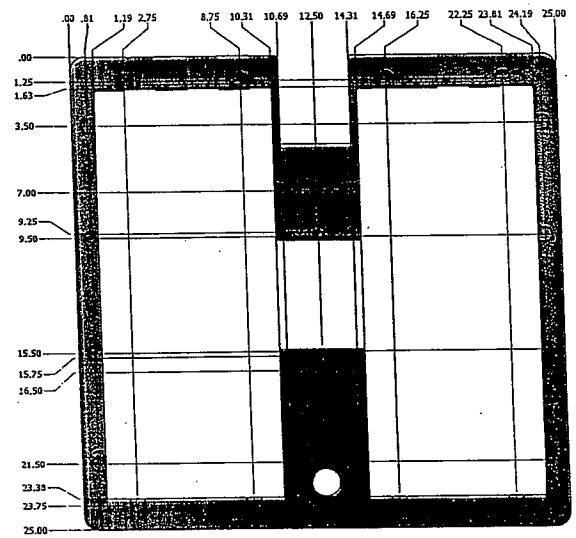

BOTTOM VIEW

BATTERY RACK KEEPER PLATE -001
UPPER

ITEM	QTY	PART NUMBER	CONTROL #	DESCRIPTION
1	1	ALL PLASTICS & FIBERGLASS EXTREN 525	7569	PLATE, FRP, 25.0 X 25.0 X 0.75, EXTREN

Parts List

UNLESS OTHERWISE SPECIFIED, DIMENSIONS ARE IN INCHES
TOLERANCES
DECIMALS .XX +/- .05 .XXX +/-.010
ANGULAR +/- .5
DO NOT SCALE DRAWING

DRAWN chucke 10/5/2007
CHECKED
QA
MFG
APPROVED

NATIONAL DATA BUOY CENTER
John C. Stennis Space Center
Stennis Space Center, Mississippi 39529

TITLE BATTERY RACK KEEPER PLATE

SIZE D | DWG NO 02.3F01173 | REV

SCALE | SHEET 1 OF 2

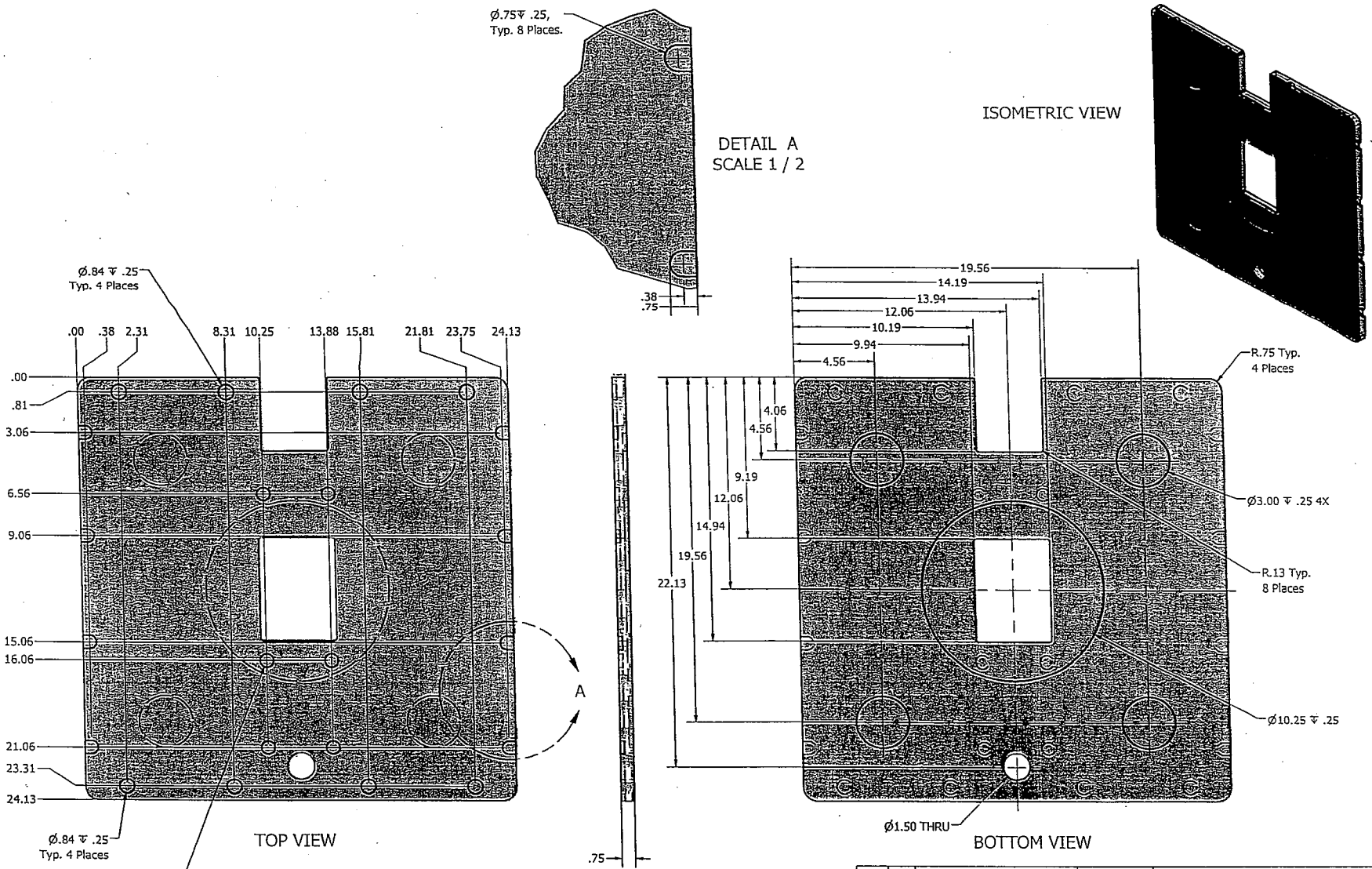

BATTERY RACK BASE PLATE -002
LOWER

ITEM	QTY	PART NUMBER	CONTROL #	DESCRIPTION
1	1	ALL PLASTICS & FIBERGLASS EXTREN 525	7569	PLATE, FRP, 24.13 X 24.13 X 0.75, EXTREN

Parts List

UNLESS OTHERWISE SPECIFIED:
DIMENSIONS ARE IN INCHES
TOLERANCES
DECIMALS .XX +/- .05 .XXX +/-.010
ANGULAR +/- .5
DO NOT SCALE DRAWING

DRAWN	chuckc	10/30/2007
CHECKED		
QA		
MFG		
APPROVED		

NATIONAL DATA BUOY CENTER
John C. Stennis Space Center
Stennis Space Center, Mississippi,39529

TITLE
BATTERY RACK BASE PLATE

SIZE	DWG NO	REV
C	02.3F01172	

SCALE

SHEET 2 OF 2

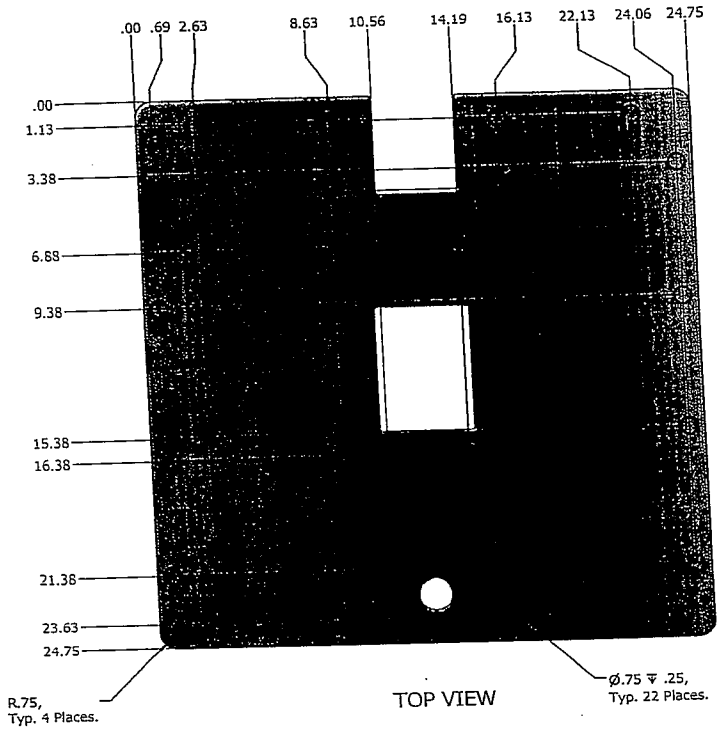

TOP VIEW

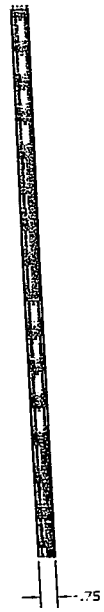

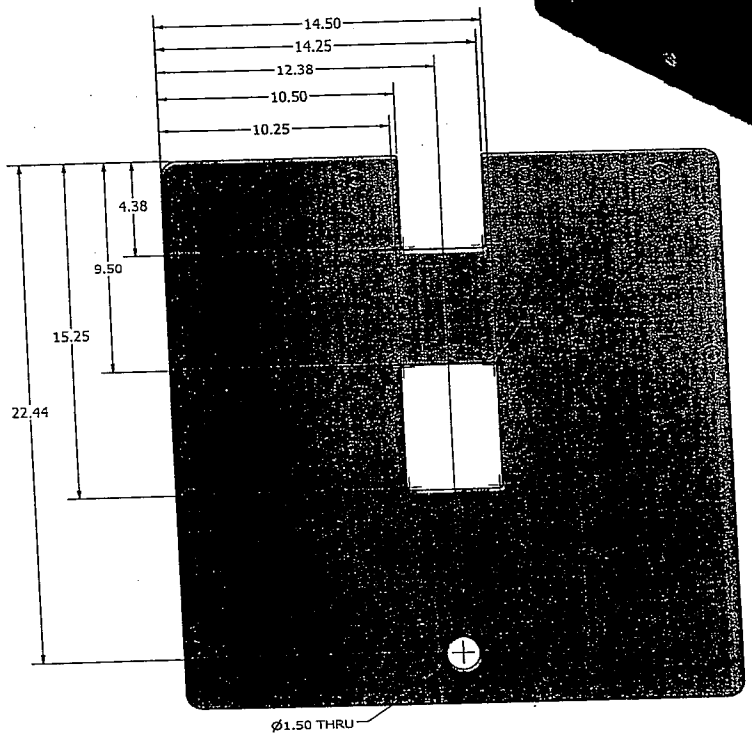

BOTTOM VIEW

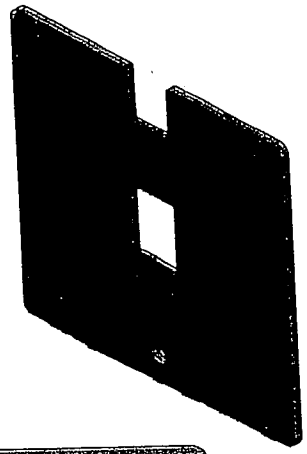

ISOMETRIC VIEW

BATTERY RACK BASE PLATE -001
UPPER

ITEM	QTY	PART NUMBER	CONTROL #	DESCRIPTION
1	1	ALL PLASTICS & FIBERGLASS EXTREN 525	7569	PLATE, FRP, 24.75 X 24.75 X 0.75, EXTREN

Parts List

UNLESS OTHERWISE SPECIFIED:
DIMENSIONS ARE IN INCHES
TOLERANCES
DECIMALS .XX +/- .05 .XXX +/-.010
ANGULAR +/- .5
DO NOT SCALE DRAWING

DRAWN	chuckc	10/30/2007
CHECKED		
QA		
MFG		
APPROVED		

NATIONAL DATA BUOY CENTER
John C. Stennis Space Center
Stennis Space Center, Mississippi,39529

TITLE
BATTERY RACK BASE PLATE

SIZE	DWG NO	REV
C	02.3F01172	

SCALE

SHEET 1 OF 2

SHORT EDGE VIEW

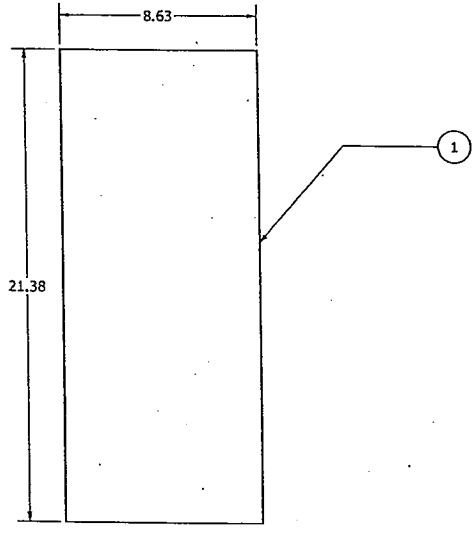

FRONT VIEW

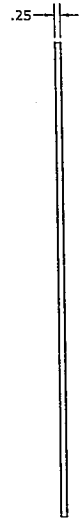

LONG EDGE VIEW

ISOMETRIC VIEW

BATTERY MAT -001

ITEM	QTY	PART NUMBER	CONTROL #	DESCRIPTION
1	1	McMASTER-CARR 86425K34	2115	GASKET, NEOPRENE, 50A DURO, 0.25 X 8.63 X 21.38

Parts List

UNLESS OTHERWISE SPECIFIED:
DIMENSIONS ARE IN INCHES
TOLERANCES
DECIMALS .XX +/- .05 .XXX +/-.010
ANGULAR +/- .5
DO NOT SCALE DRAWING

DRAWN chuckc 10/30/2007
CHECKED
QA
MFG
APPROVED

NATIONAL DATA BUOY CENTER
John C. Stennis Space Center
Stennis Space Center, Mississippi,39529

TITLE
BATTERY MAT

SIZE C
DWG NO 02.3F01171
REV
SCALE
SHEET 1 OF 1

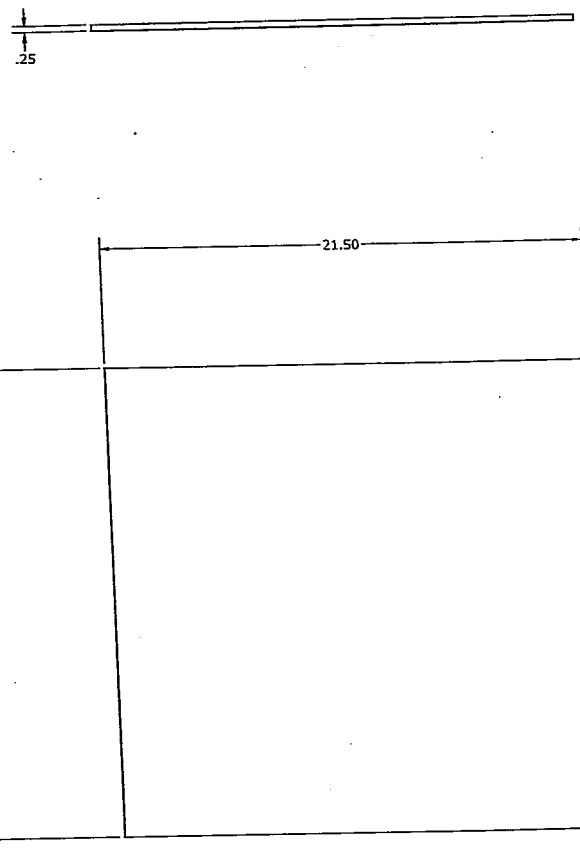

TOP VIEW

ISOMETRIC VIEW

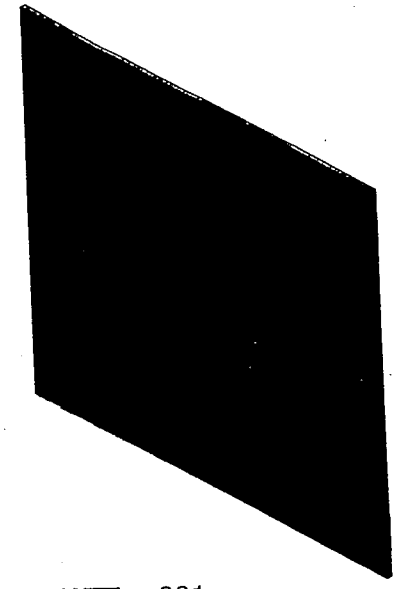

UPPER WELL MATT -001

ITEM	QTY	PART NUMBER	CONTROL #	DESCRIPTION
1	1	McMASTER-CARR 86425K34	2115	GASKET, NEOPRENE, 50A DURO, 0.25 X 21.50 X 21.50

Parts List

UNLESS OTHERWISE SPECIFIED:
DIMENSIONS ARE IN INCHES
TOLERANCES
DECIMALS .XX +/- .05 .XXX +/-.010
ANGULAR +/- .5
DO NOT SCALE DRAWING

DRAWN	T. RUTLEDGE	10/5/2007
CHECKED		
QA		
MFG		
APPROVED		

NATIONAL DATA BUOY CENTER
John C. Stennis Space Center
Stennis Space Center, Mississippi,39529

TITLE
UPPER WELL MATT

SIZE C | DWG NO 02.3F01170 | REV

SCALE | SHEET 1 OF 1

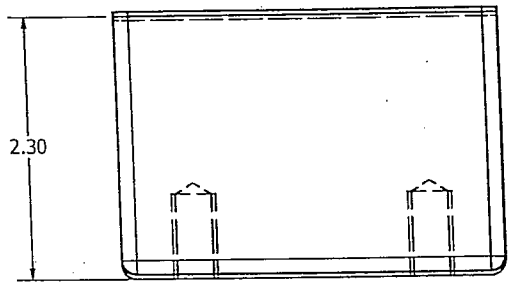

TOP VIEW

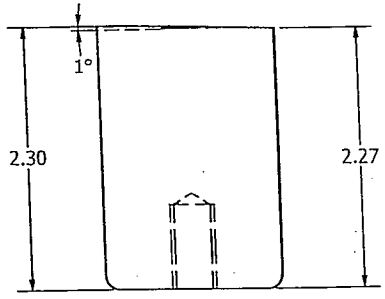

SIDE VIEW

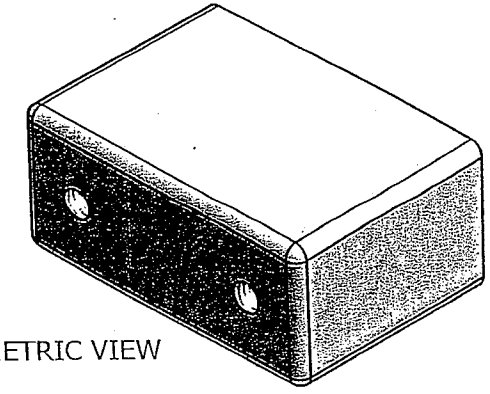

ISOMETRIC VIEW

RAIL MOUNT -001
BOTTOM

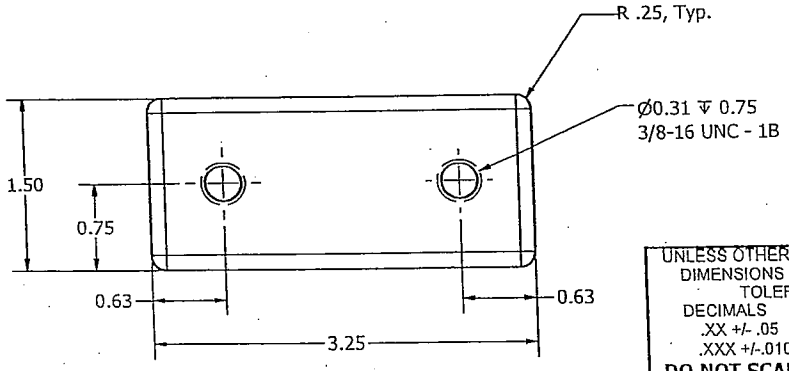

FRONT VIEW

UNLESS OTHERWISE SPECIFIED:
DIMENSIONS ARE IN INCHES
TOLERANCES

DECIMALS	ANGULAR
.XX +/- .05	+/- .5
.XXX +/-.010	.

DO NOT SCALE DRAWING

ITEM	QTY	PART NUMBER	CONTROL #	DESCRIPTION
1	1	-	NSN	BLOCK, MOLDED FIBERGLASS, 1.50 X 2.30 X 3.25

Parts List

DRAWN	T. RUTLEDGE	10/1/2007
CHECKED		
QA		
MFG		
APPROVED		

NATIONAL DATA BUOY CENTER
John C. Stennis Space Center
Stennis Space Center, Mississippi,39529

TITLE

RAIL MOUNT

SIZE	DWG NO	REV
B	02.3F01169	

SCALE

SHEET 1 OF 2

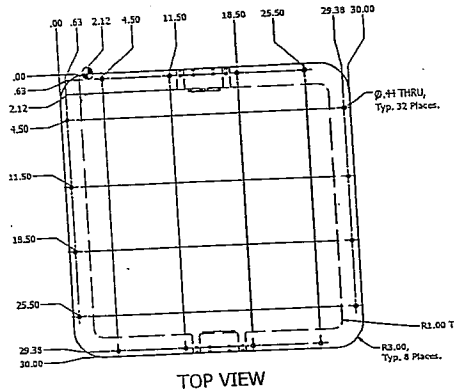

TOP VIEW

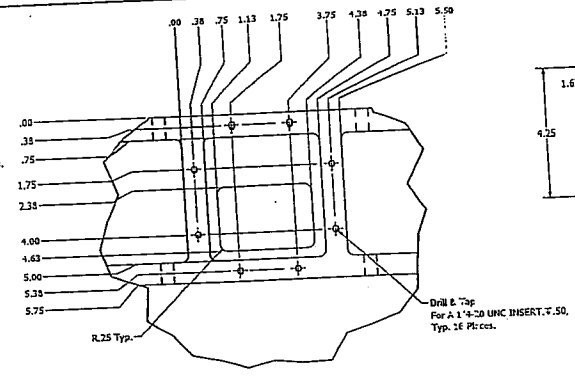

DETAIL A

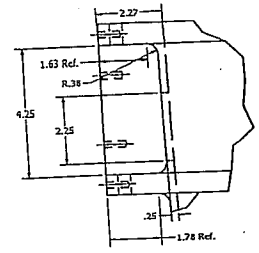

DETAIL B

BOTH SIDES

ISOMETRIC VIEW

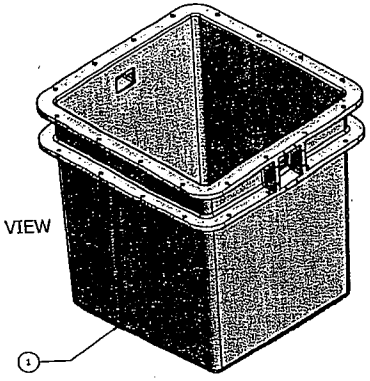

UPPER EQUIPMENT WELL SHELL -001

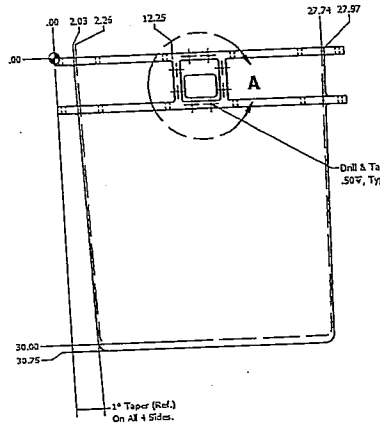

FRONT VIEW

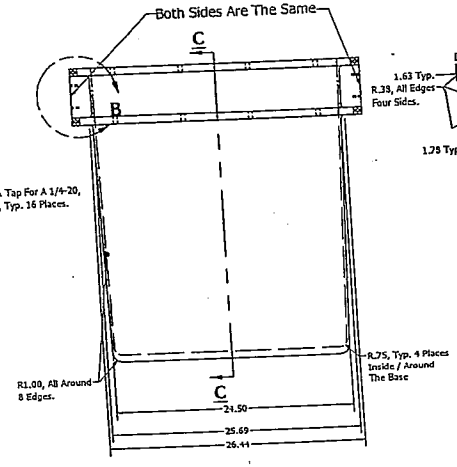

SIDE VIEW

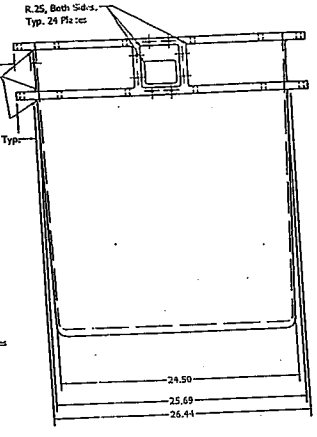

REAR VIEW

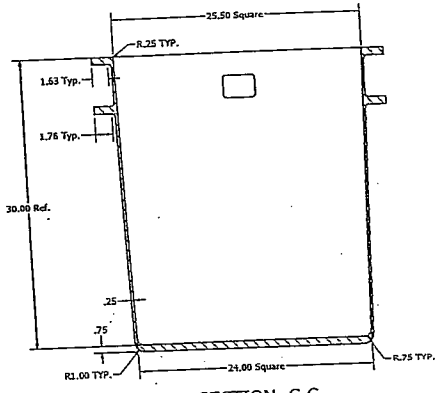

SECTION C-C

ITEM	QTY	PART NUMBER	CONTROL #	DESCRIPTION
1	1	SUNBACKER FIBERGLASS No Part #	13521	SHELL, 2.3 METER UPPER EQUIPMENT WELL, FIBERGLASS

Parts List

UNLESS OTHERWISE SPECIFIED: DIMENSIONS ARE IN INCHES
TOLERANCES
DECIMALS .XX +/-.05 .XXX +/-.010
ANGULAR +/-.5
DO NOT SCALE DRAWING

DRAWN	chucke	10/30/2007
CHECKED	T. Rudedge	11/21/2007
QA		
MFG		
APPROVED		

NATIONAL DATA BUOY CENTER
John C. Stennis Space Center
Stennis Space Center, Mississippi 39529

TITLE: UPPER EQUIPMENT WELL SHELL

SIZE: D | DWG NO: 02.3F01168 | REV

SCALE | SHEET 1 OF 1

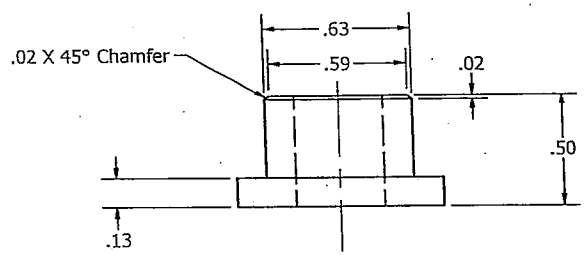

SIDE VIEW

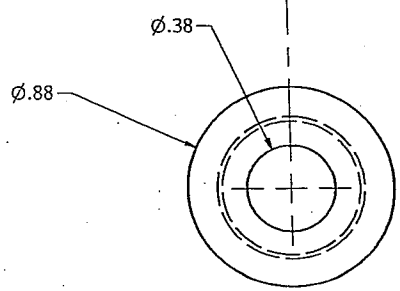

FRONT VIEW

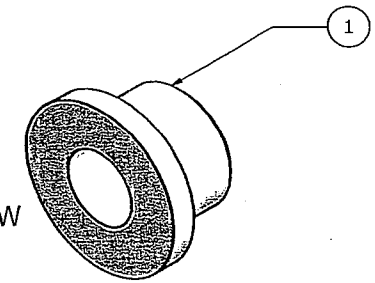

ISOMETRIC VIEW

WELL LID BUSHING -001

ITEM	QTY	PART NUMBER	CONTROL #	DESCRIPTION
1	1	McMASTER-CARR 8701K851	-	ROD, PLASTIC, UHMW POLYETHYLENE, 0.88 OD X 0.50 LG, WHITE

Parts List

UNLESS OTHERWISE SPECIFIED:
DIMENSIONS ARE IN INCHES
TOLERANCES

DECIMALS	ANGULAR
.XX +/- .05	+/- .5
.XXX +/-.010	.

DO NOT SCALE DRAWING

DRAWN	T. RUTLEDGE	10/5/2007
CHECKED		
QA		
MFG		
APPROVED		

NATIONAL DATA BUOY CENTER
John C. Stennis Space Center
Stennis Space Center, Mississippi,39529

TITLE

WELL LID BUSHING

SIZE	DWG NO	REV
B	02.3F01167	

SCALE

SHEET 1 OF 1

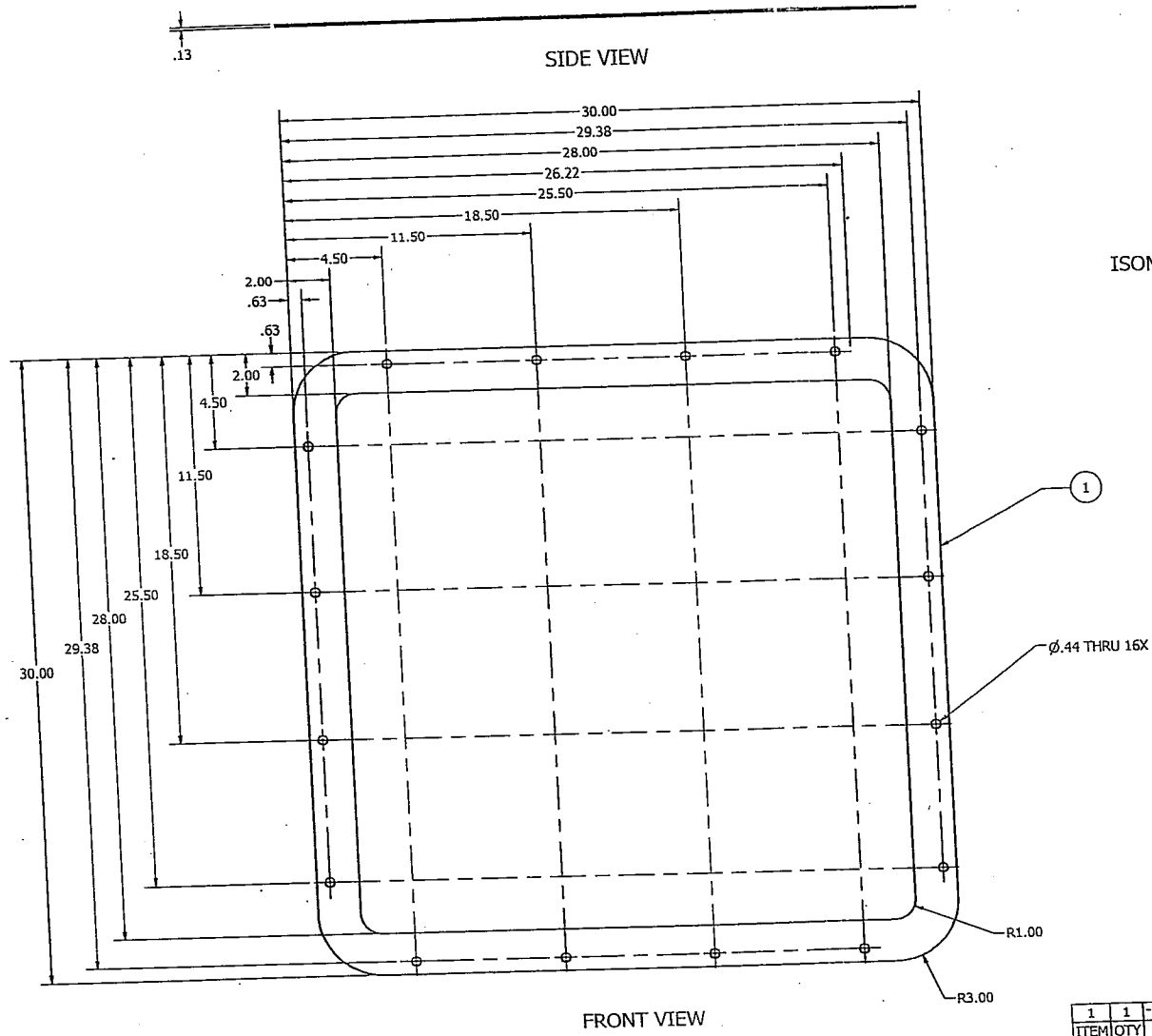

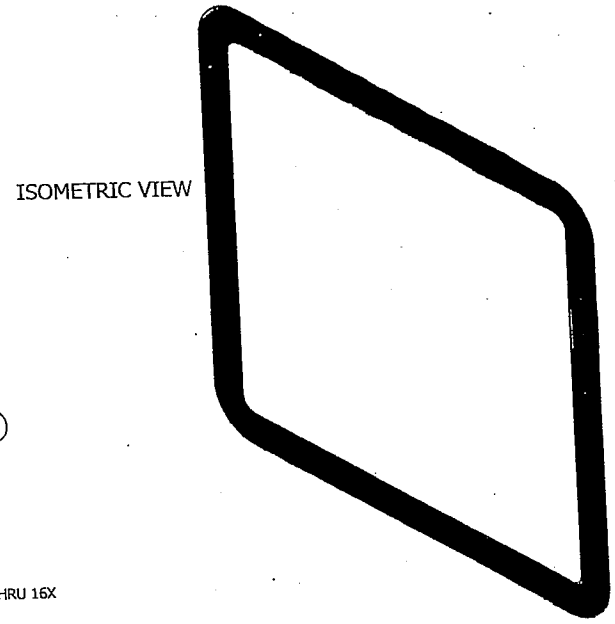

UPPER WELL LID GASKET -001

ITEM	QTY	PART NUMBER	CONTROL #	DESCRIPTION
1	1	-	2156	GASKET, NEOPRENE, 60 DURO, 0.125 X 30.00 X 30.00

Parts List

UNLESS OTHERWISE SPECIFIED:
DIMENSIONS ARE IN INCHES
TOLERANCES
DECIMALS .XX +/- .05 .XXX +/-.010
ANGULAR +/- .5
DO NOT SCALE DRAWING

DRAWN	T. RUTLEDGE	10/5/2007
CHECKED		
QA		
MFG		
APPROVED		

NATIONAL DATA BUOY CENTER
John C. Stennis Space Center
Stennis Space Center, Mississippi,39529

TITLE
UPPER WELL LID GASKET

SIZE	DWG NO	REV
C	02.3F01166	

SCALE

SHEET 1 OF 1

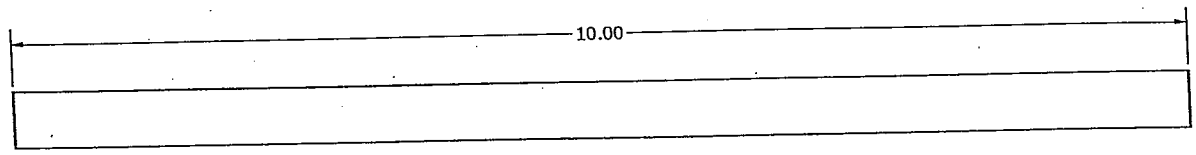

LENGTH BEFORE BENDING

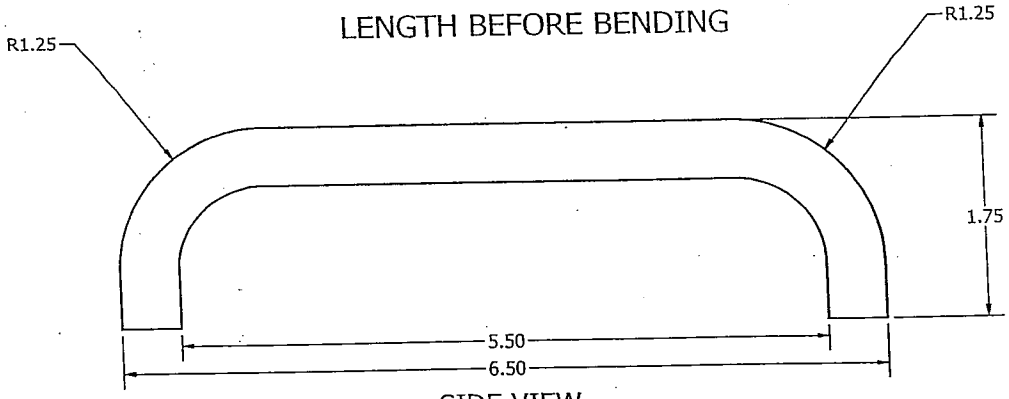

SIDE VIEW

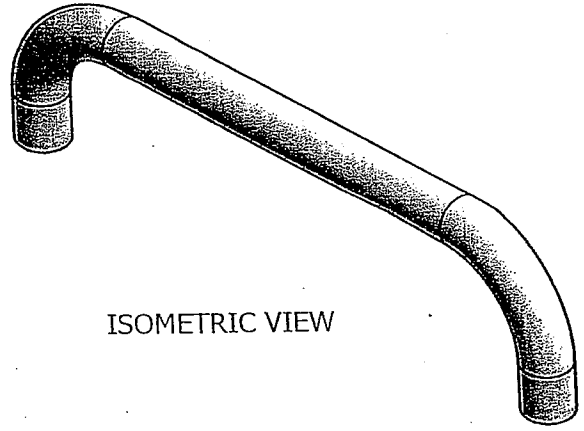

ISOMETRIC VIEW

WELL LID HANDLE -001

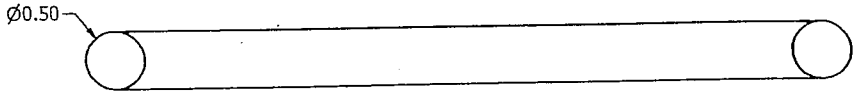

BOTTOM VIEW

ITEM	QTY	PART NUMBER	CONTROL #	DESCRIPTION
1	1	-	8416	BAR, ROUND, ALUMINUM 5086, 0.50 DIA X 10.00 LG

Parts List

UNLESS OTHERWISE SPECIFIED:
DIMENSIONS ARE IN INCHES
TOLERANCES
DECIMALS .XX +/- .05 .XXX +/-.010
ANGULAR +/- .5
DO NOT SCALE DRAWING

DRAWN	Chuck	10/4/2007
CHECKED		
QA		
MFG		
APPROVED		

NATIONAL DATA BUOY CENTER
John C. Stennis Space Center
Stennis Space Center, Mississippi,39529

TITLE
WELL LID HANDLE

SIZE	DWG NO	REV
B	02.3F01165	

SCALE

SHEET 1 OF 1

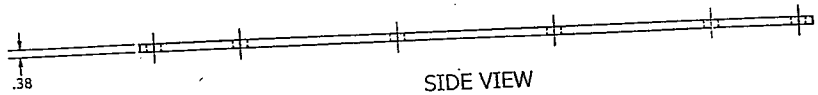

SIDE VIEW

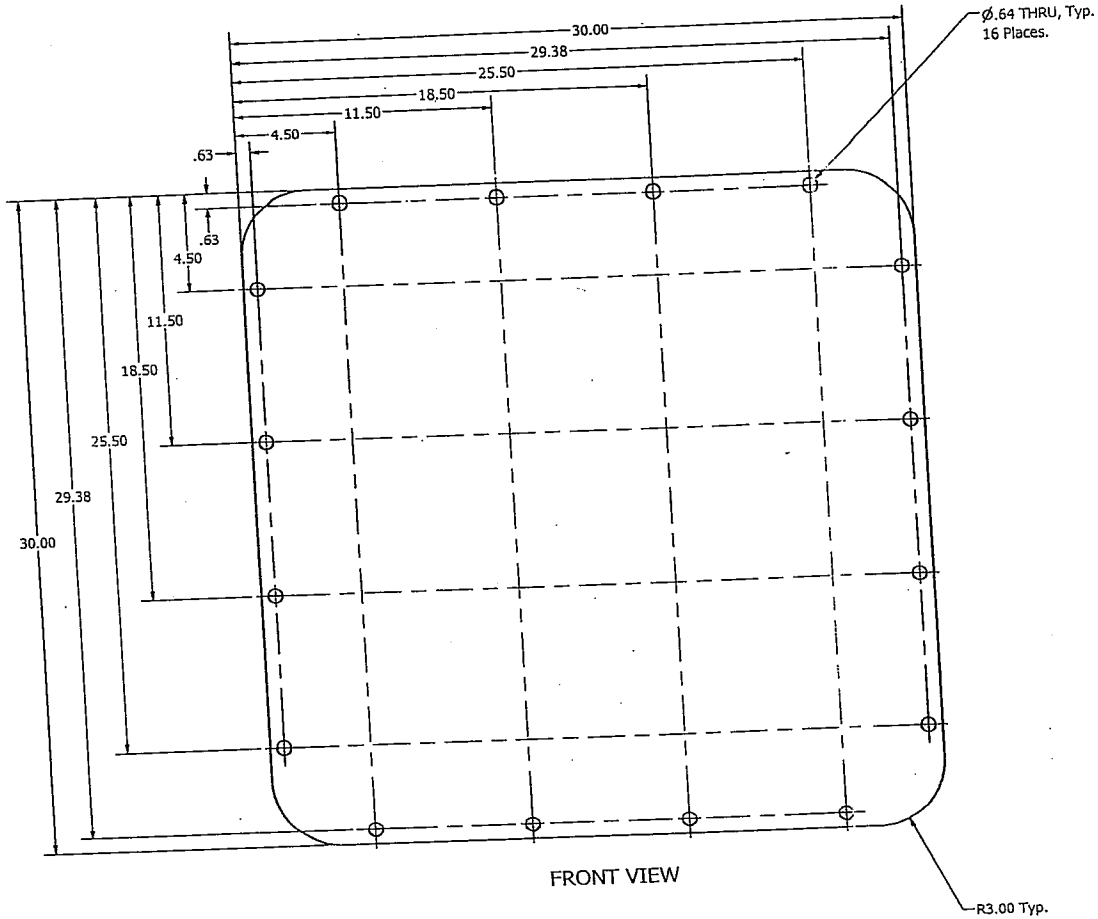

FRONT VIEW

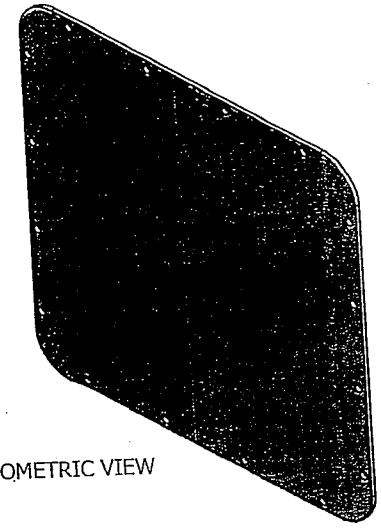

ISOMETRIC VIEW

UPPER WELL LID PLATE -001

ITEM	QTY	PART NUMBER	CONTROL #	DESCRIPTION
1	1	-	8409	PLATE, ALUMINUM 5086, 0.375 X 30.00 X 30.00

Parts List

UNLESS OTHERWISE SPECIFIED:
DIMENSIONS ARE IN INCHES
TOLERANCES
DECIMALS .XX +/- .05 .XXX +/-.010
ANGULAR +/- .5
DO NOT SCALE DRAWING

DRAWN	T. RUTLEDGE	10/5/2007
CHECKED		
QA		
MFG		
APPROVED		

NATIONAL DATA BUOY CENTER
John C. Stennis Space Center
Stennis Space Center, Mississippi,39529

TITLE: UPPER WELL LID PLATE

SIZE: C | DWG NO: 02.3F01164 | REV

SCALE | SHEET 1 OF 1

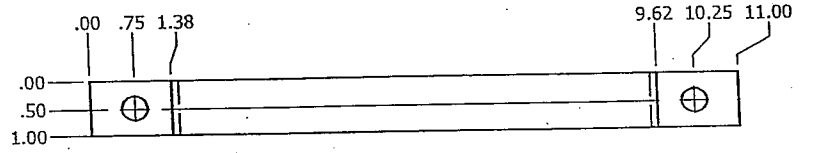

TOP VIEW

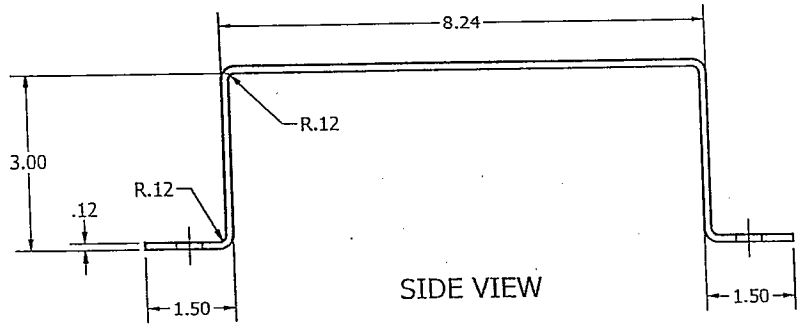

SIDE VIEW

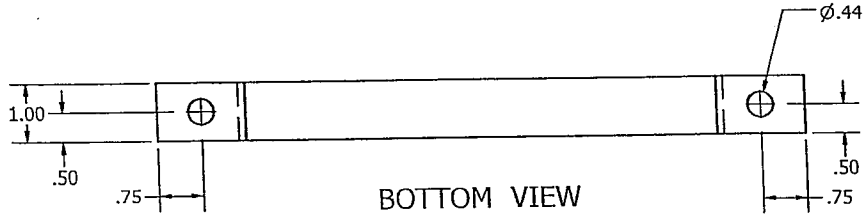

BOTTOM VIEW

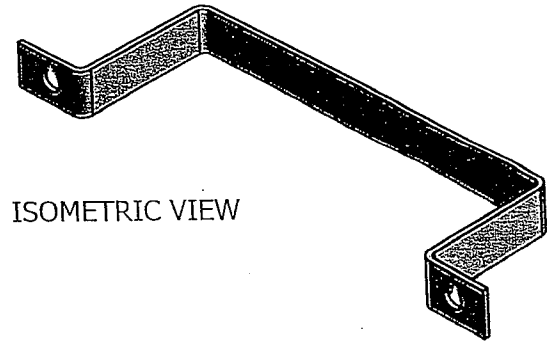

ISOMETRIC VIEW

AUXILLARY POWER STRAP -001

ITEM	QTY	PART NUMBER	CONTROL #	DESCRIPTION
1	1	-	7349	PLATE, METAL, 316 SST, 0.125 X 1.0 X 16.65 (1/8")

Parts List

UNLESS OTHERWISE SPECIFIED:
DIMENSIONS ARE IN INCHES
TOLERANCES
DECIMALS .XX +/- .05 .XXX +/-.010
ANGULAR +/- .5
DO NOT SCALE DRAWING

DRAWN	T. RUTLEDGE	10/17/2007
CHECKED		
QA		
MFG		
APPROVED		

NATIONAL DATA BUOY CENTER
John C. Stennis Space Center
Stennis Space Center, Mississippi,39529

TITLE
AUXILLARY POWER STRAP

SIZE	DWG NO	REV
B	02.3F01162	

SCALE

SHEET 1 OF 1

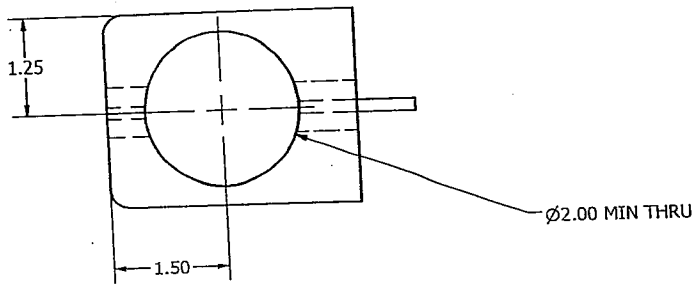

TOP VIEW

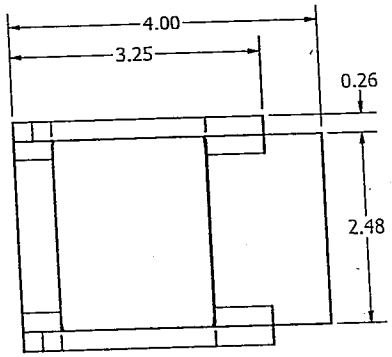

SIDE VIEW

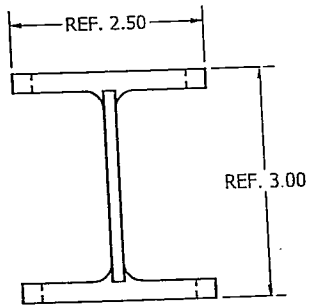

END VIEW

ISOMETRIC VIEW

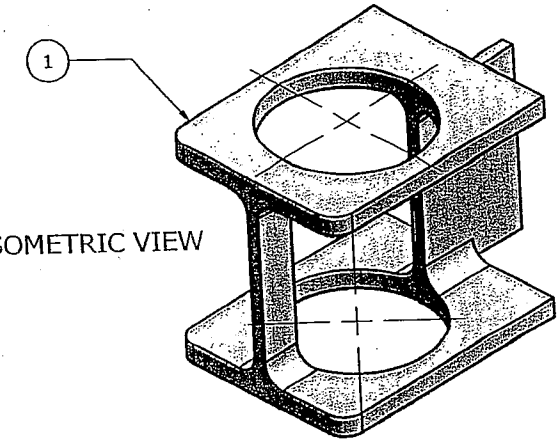

THRU BOLT HOLDER I-BEAM -001

ITEM	QTY	PART NUMBER	CONTROL #	DESCRIPTION
1	1	I3x2_03x4.5	8420	I BEAM, ALUMINUM 5086, I3 X 2.03 X 4.00 LG.

Parts List

UNLESS OTHERWISE SPECIFIED:
DIMENSIONS ARE IN INCHES
TOLERANCES
DECIMALS .XX +/- .05 .XXX +/-.010
ANGULAR +/- .5
DO NOT SCALE DRAWING

DRAWN	T. RUTLEDGE	10/3/2007
CHECKED		
QA		
MFG		
APPROVED		

NATIONAL DATA BUOY CENTER
John C. Stennis Space Center
Stennis Space Center, Mississippi,39529

TITLE
THRU BOLT HOLDER I-BEAM

SIZE	DWG NO	REV
B	02.3F01161	

SCALE | SHEET 1 OF 1

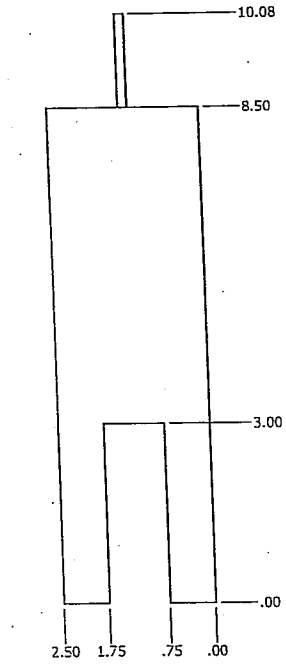

TOP VIEW

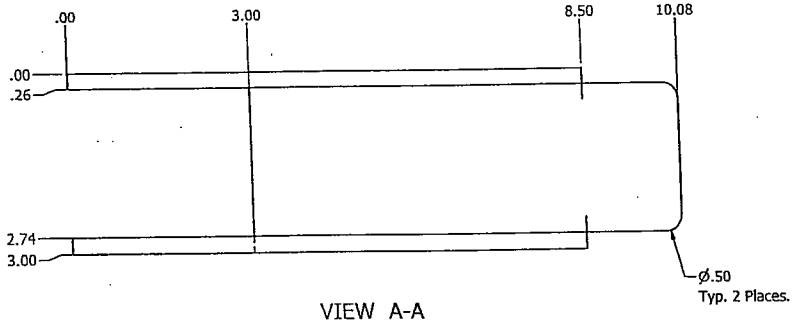

VIEW A-A

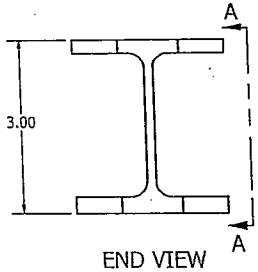

END VIEW

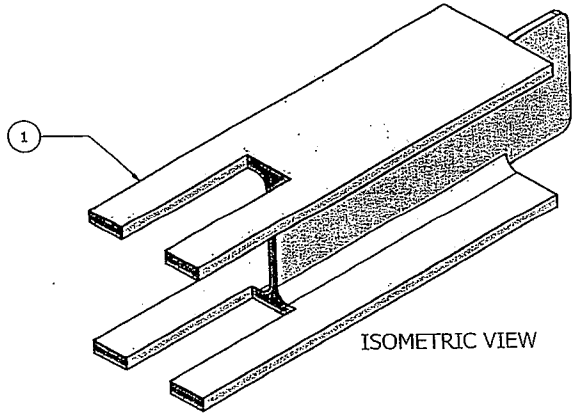

ISOMETRIC VIEW

PADEYE HOLDER I-BEAM -001

ITEM	QTY	PART NUMBER	CONTROL #	DESCRIPTION
1	1	I3x2_03x12.5	8420	I BEAM, ALUMINUM 5086, 3.0 H X 2.5 W X 10.08 LG

Parts List

UNLESS OTHERWISE SPECIFIED:
DIMENSIONS ARE IN INCHES
TOLERANCES
DECIMALS .XX +/- .05 .XXX +/-.010
ANGULAR +/- .5
DO NOT SCALE DRAWING

DRAWN	chuckc	10/29/2007
CHECKED		
QA		
MFG		
APPROVED		

NATIONAL DATA BUOY CENTER
John C. Stennis Space Center
Stennis Space Center, Mississippi,39529

TITLE
PADEYE HOLDER I-BEAM

SIZE C | DWG NO 02.3F01160 | REV

SCALE | SHEET 1 OF 1

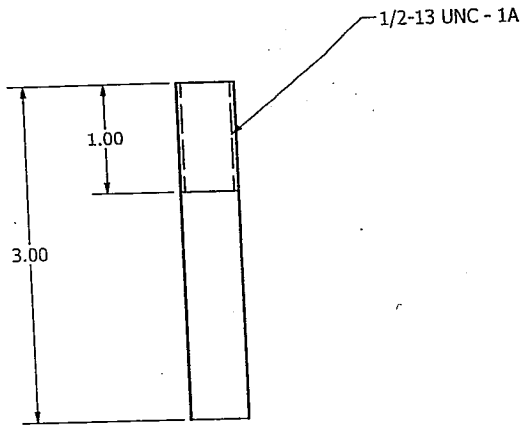

SIDE VIEW

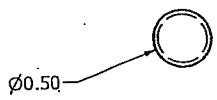

END VIEW

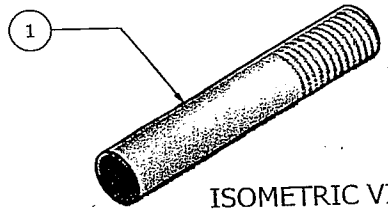

ISOMETRIC VIEW

ANODE / BALLAST RETAINING STUD
-001

ITEM	QTY	PART NUMBER	CONTROL #	DESCRIPTION
1	1	-	8416	BAR, ROUND, ALUMINUM 5086, 0.50 DIA X 3.00 LG

Parts List

UNLESS OTHERWISE SPECIFIED:
DIMENSIONS ARE IN INCHES
TOLERANCES
DECIMALS .XX +/- .05 .XXX +/-.010
ANGULAR +/- .5
DO NOT SCALE DRAWING

DRAWN	T. RUTLEDGE	10/3/2007
CHECKED		
QA		
MFG		
APPROVED		

NATIONAL DATA BUOY CENTER
John C. Stennis Space Center
Stennis Space Center, Mississippi,39529

TITLE
ANODE / BALLAST RETAINING STUD

SIZE	DWG NO	REV
B	02.3F01159	

SCALE

SHEET 1 OF 1

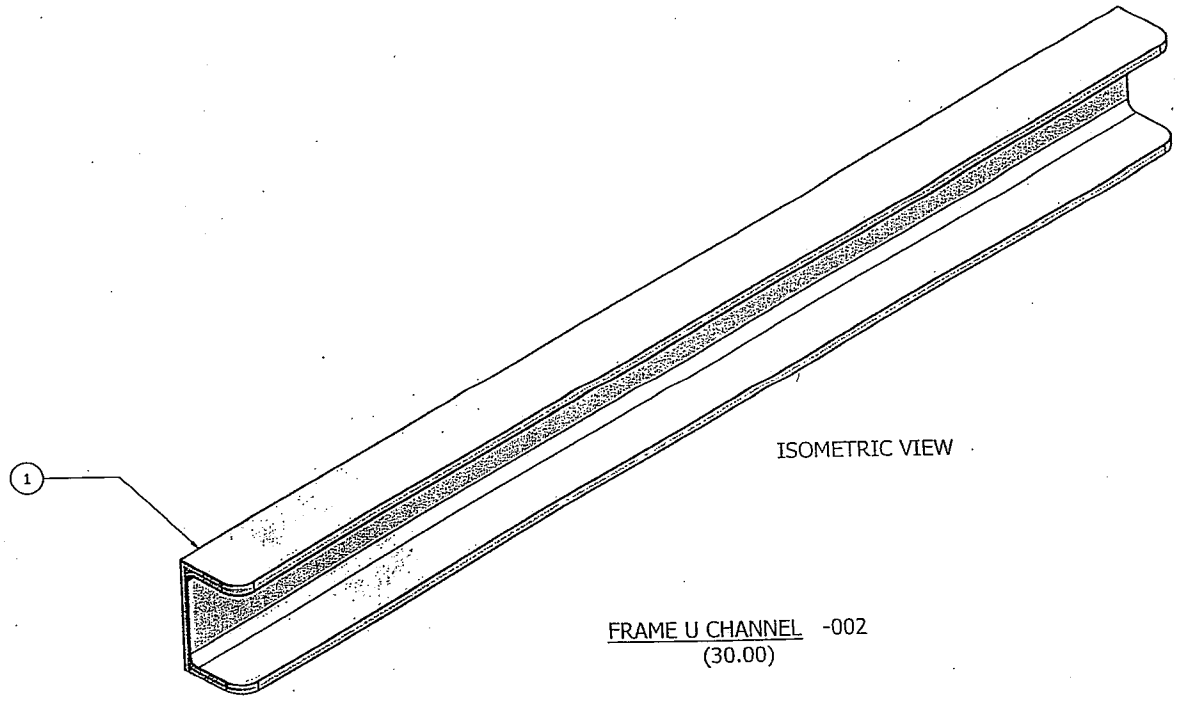

ISOMETRIC VIEW

FRAME U CHANNEL -002
(30.00)

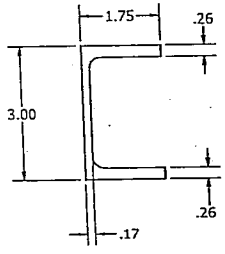

END VIEW

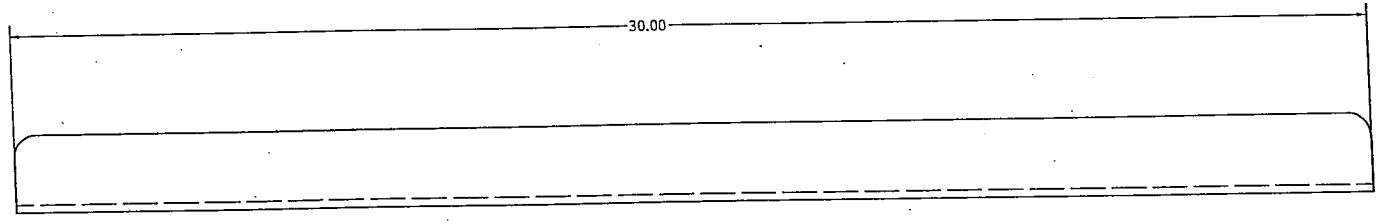

FRONT VIEW

ITEM	QTY	PART NUMBER	CONTROL #	DESCRIPTION
1	1	CS3x1_60x26	8419	U CHANNEL, ALUMINUM 5086, 3.0 H X 1.75 W X 30.0 LG, ALUM. ASSOC.

Parts List

UNLESS OTHERWISE SPECIFIED:
DIMENSIONS ARE IN INCHES
TOLERANCES
DECIMALS .XX +/- .05 .XXX +/-.010
ANGULAR +/- .5
DO NOT SCALE DRAWING

DRAWN	chuckc	10/29/2007
CHECKED		
QA		
MFG		
APPROVED		

NATIONAL DATA BUOY CENTER
John C. Stennis Space Center
Stennis Space Center, Mississippi,39529

TITLE
FRAME U CHANNEL

SIZE	DWG NO	REV
C	02.3F01158	

SCALE

SHEET 2 OF 2

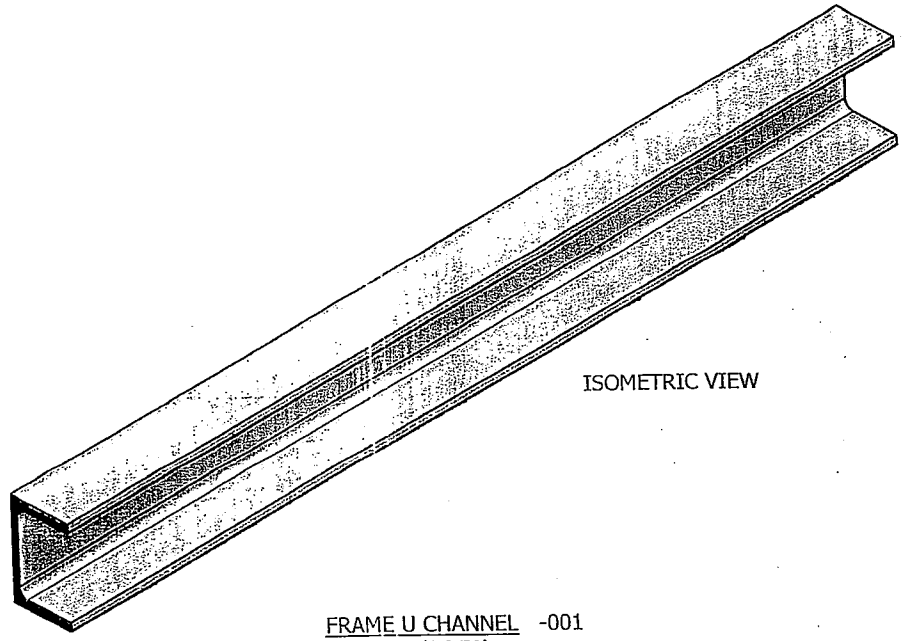

ISOMETRIC VIEW

FRAME U CHANNEL -001
(26.50)

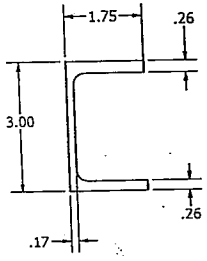

END VIEW

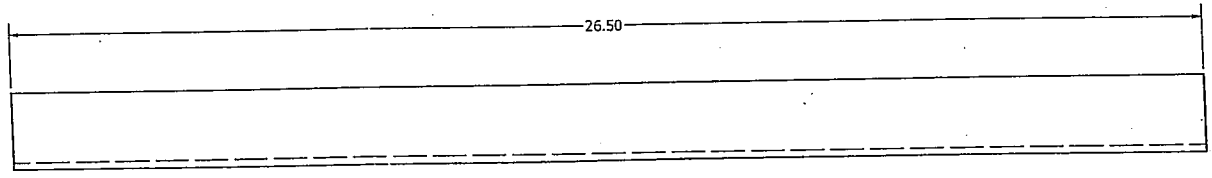

FRONT VIEW

ITEM	QTY	PART NUMBER	CONTROL #	DESCRIPTION
1	1	CS3x1_60x22_5	8419	U CHANNEL, ALUMINUM 5086, 3.0 H X 1.75 W X 26.5 LG, ALUM. ASSOC.

Parts List

UNLESS OTHERWISE SPECIFIED:
DIMENSIONS ARE IN INCHES
TOLERANCES
DECIMALS .XX +/- .05 .XXX +/-.010
ANGULAR +/- .5
DO NOT SCALE DRAWING

DRAWN chuckc 10/29/2007
CHECKED
QA
MFG
APPROVED

NATIONAL DATA BUOY CENTER
John C. Stennis Space Center
Stennis Space Center, Mississippi,39529

TITLE
FRAME U CHANNEL

SIZE C
DWG NO 02.3F01158
REV
SCALE
SHEET 1 OF 2

Notes:
1. Bolt and equipment holes shown for reference. Features to be cut or drilled after welding plates in the next assembly.

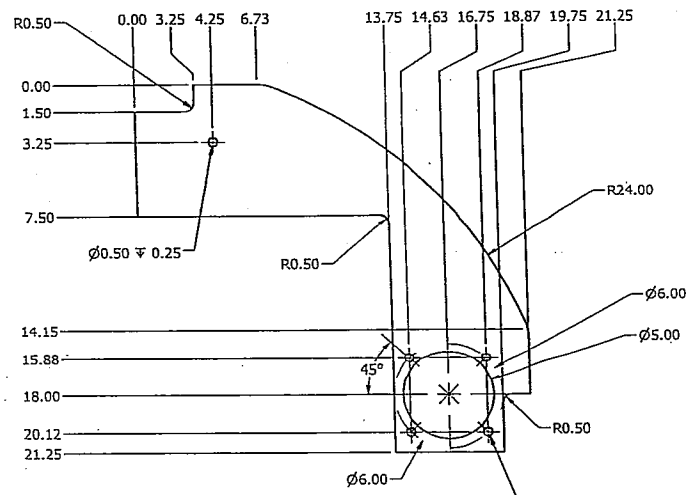

BOTTOM VIEW

SIDE VIEW

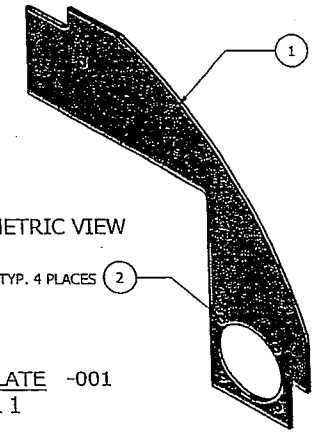

ISOMETRIC VIEW

LOWER FRAME PLATE -001
NUMBER 1

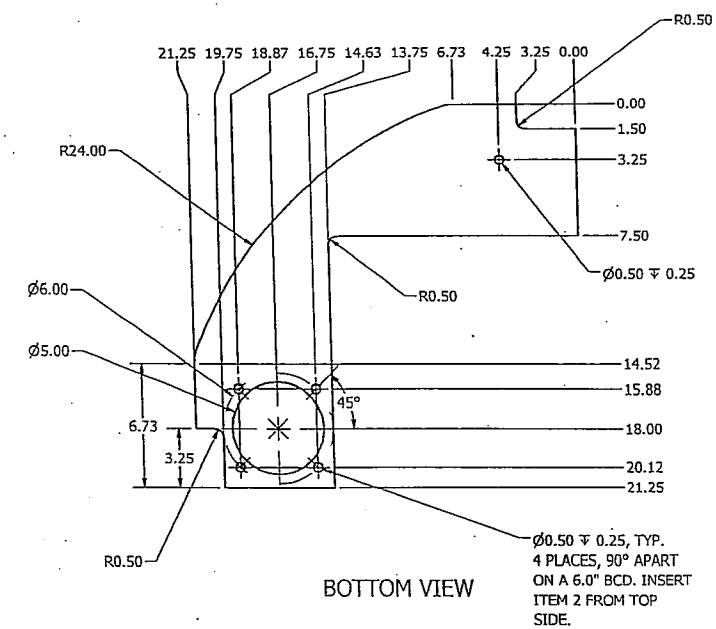

BOTTOM VIEW

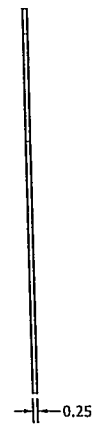

SIDE VIEW

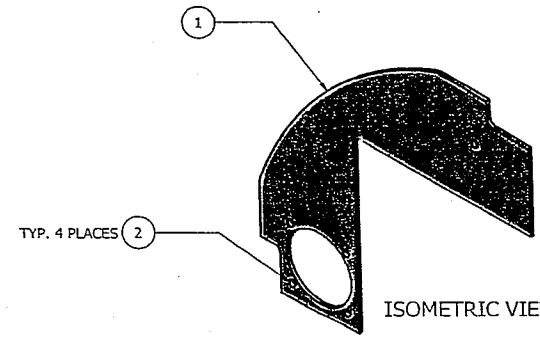

ISOMETRIC VIEW

LOWER FRAME PLATE -002
NUMBER 2

ITEM	QTY	PART NUMBER	CONTROL #	DESCRIPTION
2	4	CENTURY FASTENERS CLS0616-3	2303	NUT, SELF CLINCHING, 316 SST, 0.375-16 X 0.188 (3/8-16 X 3/16)
1	1	-	6616	PLATE, ALUMINUM 5086, 21.25 X 21.25 X 0.25 THK

-001 & -002 Parts List

UNLESS OTHERWISE SPECIFIED:
DIMENSIONS ARE IN INCHES
TOLERANCES
DECIMALS .XX +/- .05 .XXX +/-.010
ANGULAR +/- .5
DO NOT SCALE DRAWING

DRAWN	T. RUTLEDGE	10/3/2007
CHECKED		
QA		
MFG		
APPROVED		

NATIONAL DATA BUOY CENTER
John C. Stennis Space Center
Stennis Space Center, Mississippi,39529

TITLE
LOWER FRAME PLATE

SIZE	DWG NO	REV
C	02.3F01157	

SCALE

SHEET 1 OF 1

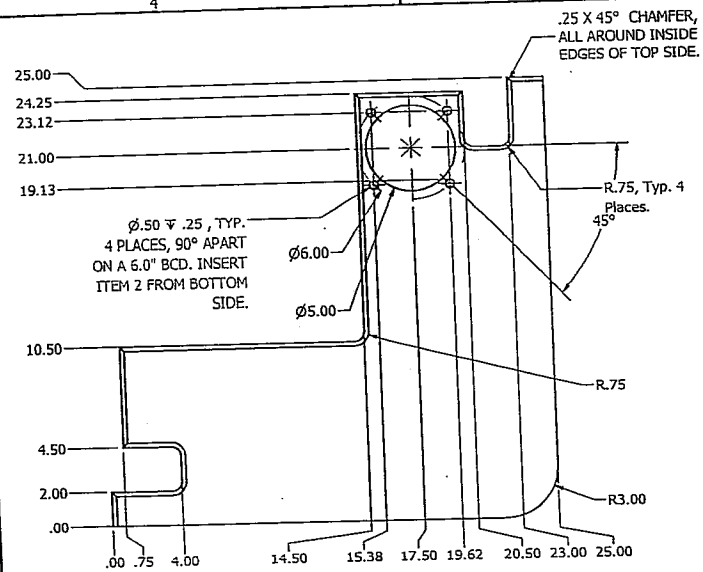

TOP VIEW

SIDE VIEW

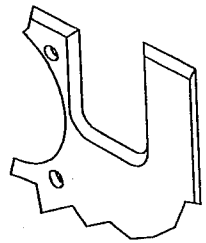

DETAIL A

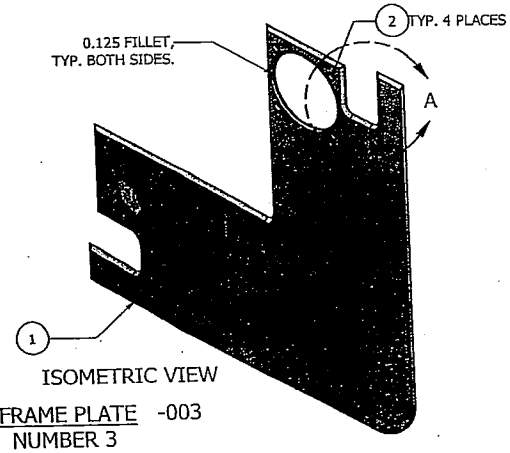

ISOMETRIC VIEW

UPPER FRAME PLATE -003
NUMBER 3

NOTES:
1. Bolt and equipment holes shown for reference. Features to be cut or drilled after welding plates in the next assembly.
2. Both of these parts are the nearly same, they are mirror fabrications of each other.

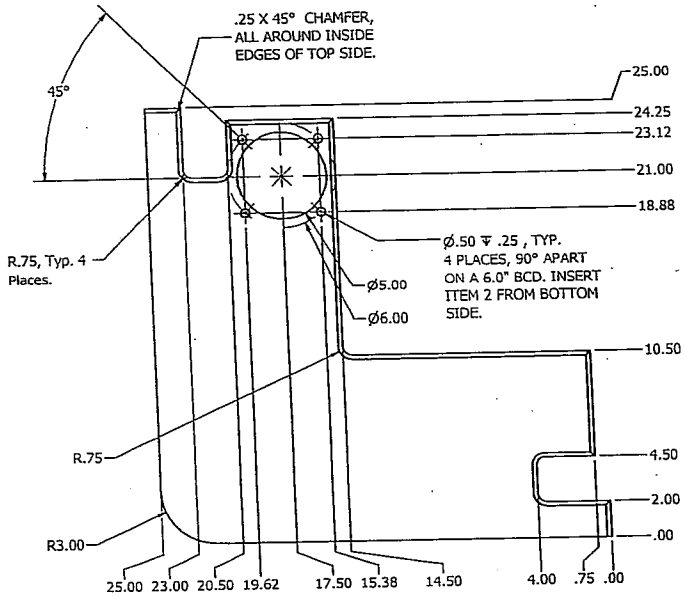

TOP VIEW

SIDE VIEW

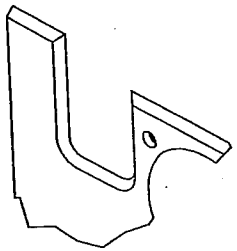

DETAIL B

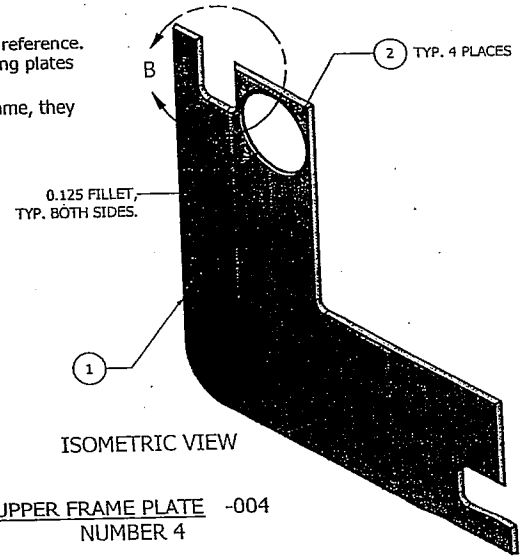

ISOMETRIC VIEW

UPPER FRAME PLATE -004
NUMBER 4

ITEM	QTY	PART NUMBER	CONTROL #	DESCRIPTION
2	4	CENTURY FASTENERS CLS0616-3	2303	NUT, SELF CLINCHING, 316 SST, 0.375-16 X 0.188 (3/8-16 X 3/16)
1	1	-	6616	PLATE, ALUMINUM 5086, 25.0 X 25.0 X 0.25 THK

-003 & -004 Parts List

UNLESS OTHERWISE SPECIFIED:
DIMENSIONS ARE IN INCHES
TOLERANCES
DECIMALS .XX +/- .05 .XXX +/-.010
ANGULAR +/- .5
DO NOT SCALE DRAWING

DRAWN	chuckc	10/29/2007
CHECKED		
QA		
MFG		
APPROVED		

NATIONAL DATA BUOY CENTER
John C. Stennis Space Center
Stennis Space Center, Mississippi,39529

TITLE
UPPER FRAME PLATE

SIZE C | DWG NO 02.3F01156 | REV

SCALE | SHEET 2 OF 2

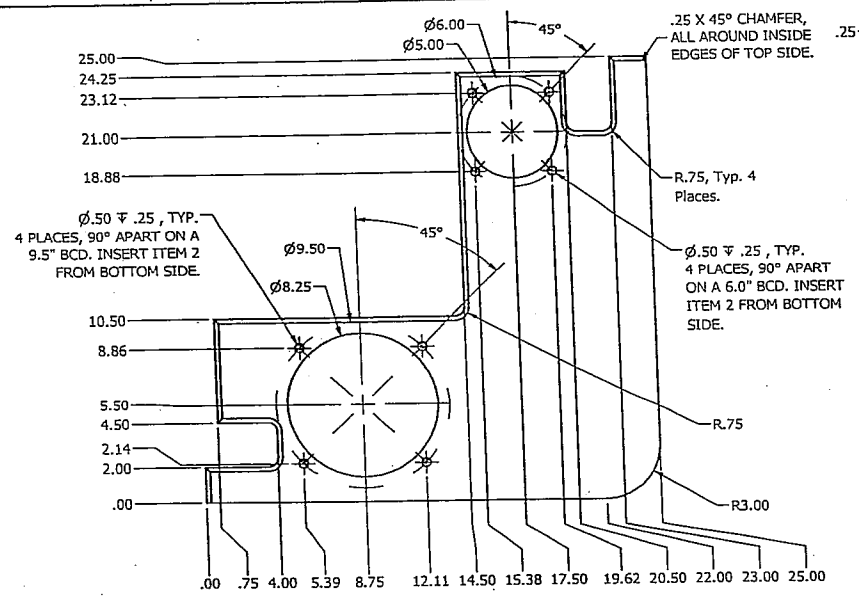

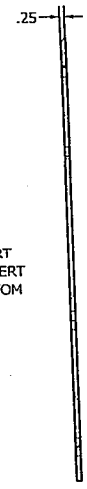

NOTES:
1. Bolt and equipment holes shown for reference. Features to be cut or drilled after welding plates in the next assembly.
2. Both of these parts are the nearly same, they are mirror fabrications of each other.

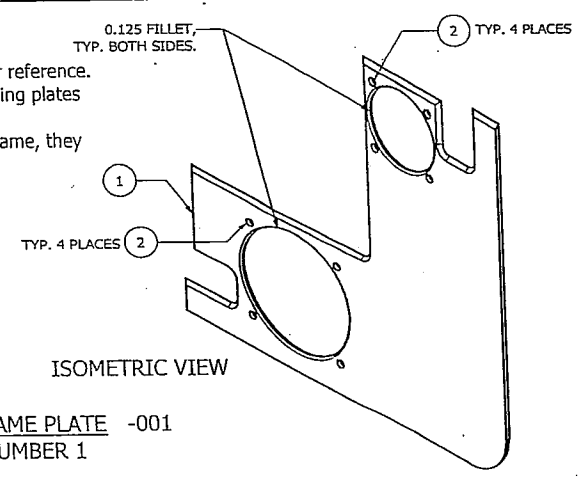

UPPER FRAME PLATE -001
NUMBER 1

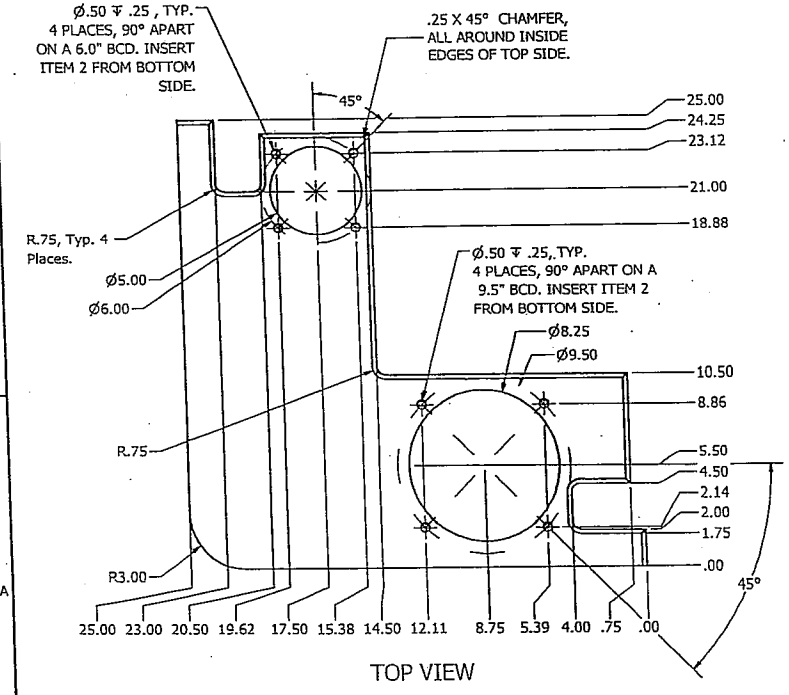

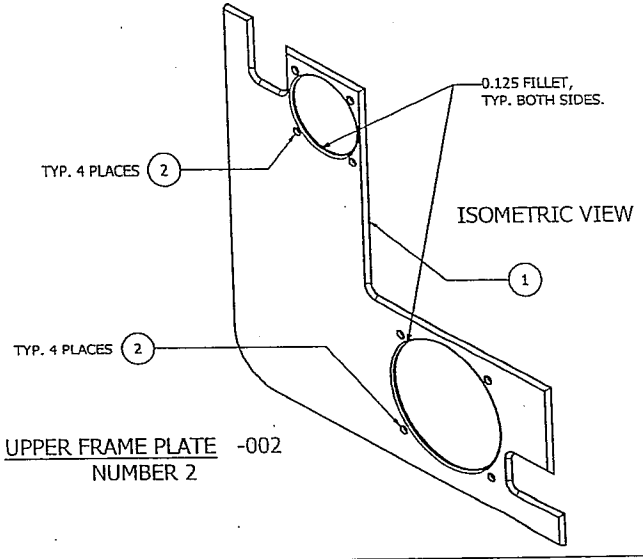

UPPER FRAME PLATE -002
NUMBER 2

ITEM	QTY	PART NUMBER	CONTROL #	DESCRIPTION
2	8	CENTURY FASTENERS CLS0616-3	2303	NUT, SELF CLINCHING, 316 SST, 0.375-16 X 0.188 (3/8-16 X 3/16)
1	1	-	6616	PLATE, ALUMINUM 5086, 25.0 X 25.0 X 0.25 THK

-001 & -002 Parts List

UNLESS OTHERWISE SPECIFIED:
DIMENSIONS ARE IN INCHES
TOLERANCES
DECIMALS .XX +/- .05 .XXX +/-.010
ANGULAR +/- .5
DO NOT SCALE DRAWING

DRAWN	chuckc	10/29/2007
CHECKED		
QA		
MFG		
APPROVED		

NATIONAL DATA BUOY CENTER
John C. Stennis Space Center
Stennis Space Center, Mississippi,39529

TITLE
UPPER FRAME PLATE

SIZE	DWG NO	REV
C	02.3F01156	

SCALE

SHEET 1 OF 2

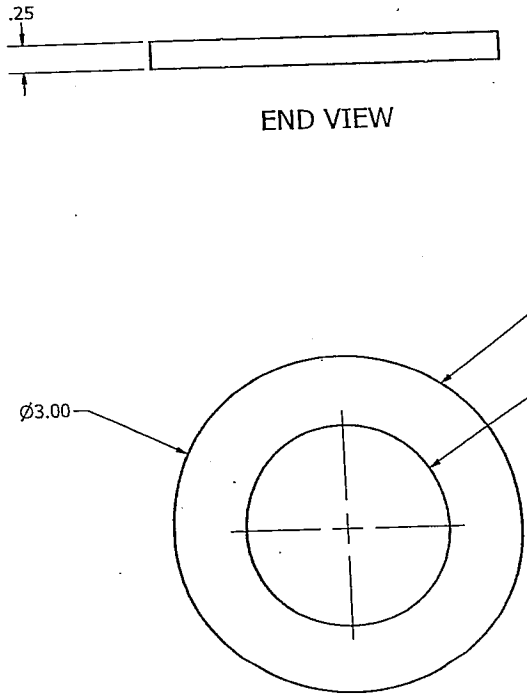

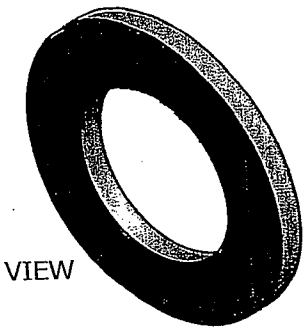

FRAME PADEYE DOUBLER -002
LOWER

ITEM	QTY	PART NUMBER	CONTROL #	DESCRIPTION
1	1	-	6616	PLATE, METAL, ALUMINUM 5086, 3.0 DIA. X 0.25 THK (1/4")

Parts List

UNLESS OTHERWISE SPECIFIED:
DIMENSIONS ARE IN INCHES
TOLERANCES
DECIMALS .XX +/- .05 .XXX +/-.010
ANGULAR +/- .5
DO NOT SCALE DRAWING

DRAWN	chuckc	10/29/2007
CHECKED		
QA		
MFG		
APPROVED		

NATIONAL DATA BUOY CENTER
John C. Stennis Space Center
Stennis Space Center, Mississippi,39529

TITLE
FRAME PADEYE DOUBLER

SIZE	DWG NO	REV
B	02.3F01155	

SCALE | SHEET 2 OF 2

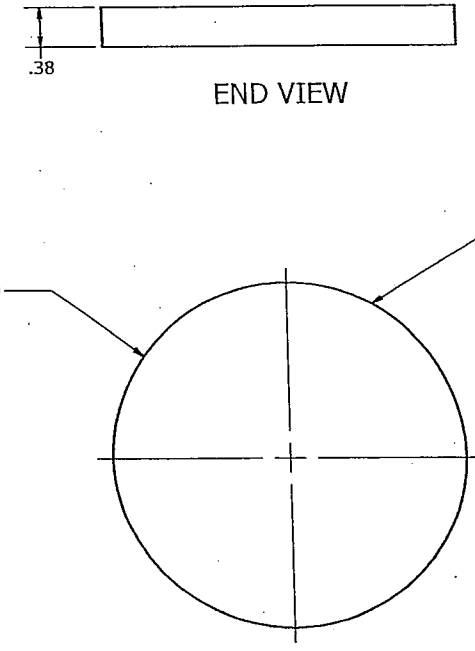

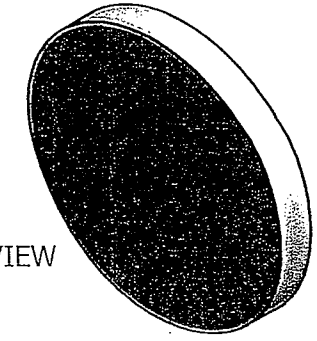

FRAME PADEYE DOUBLER -001
UPPER

ITEM	QTY	PART NUMBER	CONTROL #	DESCRIPTION
1	1	-	8409	PLATE, METAL, ALUMINUM 5086, 3.0 DIA. X 0.375 THK (3/8")

Parts List

UNLESS OTHERWISE SPECIFIED:
DIMENSIONS ARE IN INCHES
TOLERANCES
DECIMALS .XX +/- .05 .XXX +/-.010
ANGULAR +/- .5
DO NOT SCALE DRAWING

DRAWN	chuckc	10/29/2007
CHECKED		
QA		
MFG		
APPROVED		

NATIONAL DATA BUOY CENTER
John C. Stennis Space Center
Stennis Space Center, Mississippi,39529

TITLE
FRAME PADEYE DOUBLER

SIZE	DWG NO	REV
B	02.3F01155	

SCALE

SHEET 1 OF 2

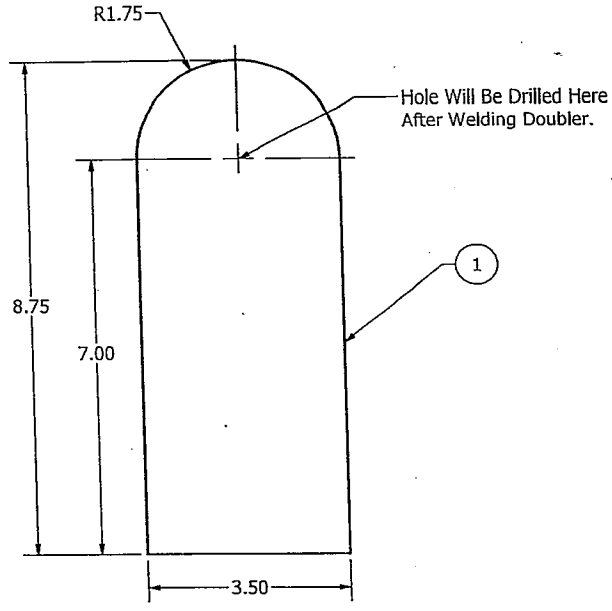

FRONT VIEW

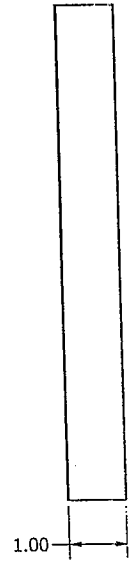

SIDE VIEW

ISOMETRIC VIEW

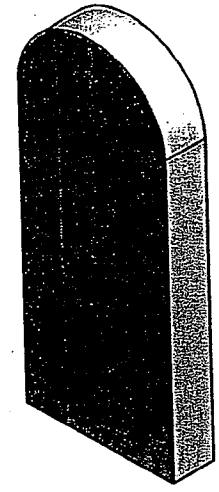

FRAME PADEYE -001
LOWER

ITEM	QTY	PART NUMBER	CONTROL #	DESCRIPTION
1	1	-	8412	PLATE, METAL, ALUMINUM 5086, 1.0 X 8.75 X 3.50

Parts List

UNLESS OTHERWISE SPECIFIED:
DIMENSIONS ARE IN INCHES
TOLERANCES
DECIMALS .XX +/- .05 .XXX +/-.010
ANGULAR +/- .5
DO NOT SCALE DRAWING

DRAWN	chuckc	10/5/2007
CHECKED		
QA		
MFG		
APPROVED		

NATIONAL DATA BUOY CENTER
John C. Stennis Space Center
Stennis Space Center, Mississippi,39529

TITLE
FRAME PADEYE

SIZE	DWG NO	REV
B	02.3F01154	

SCALE

SHEET 2 OF 2

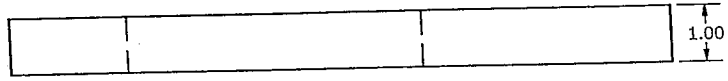

TOP VIEW

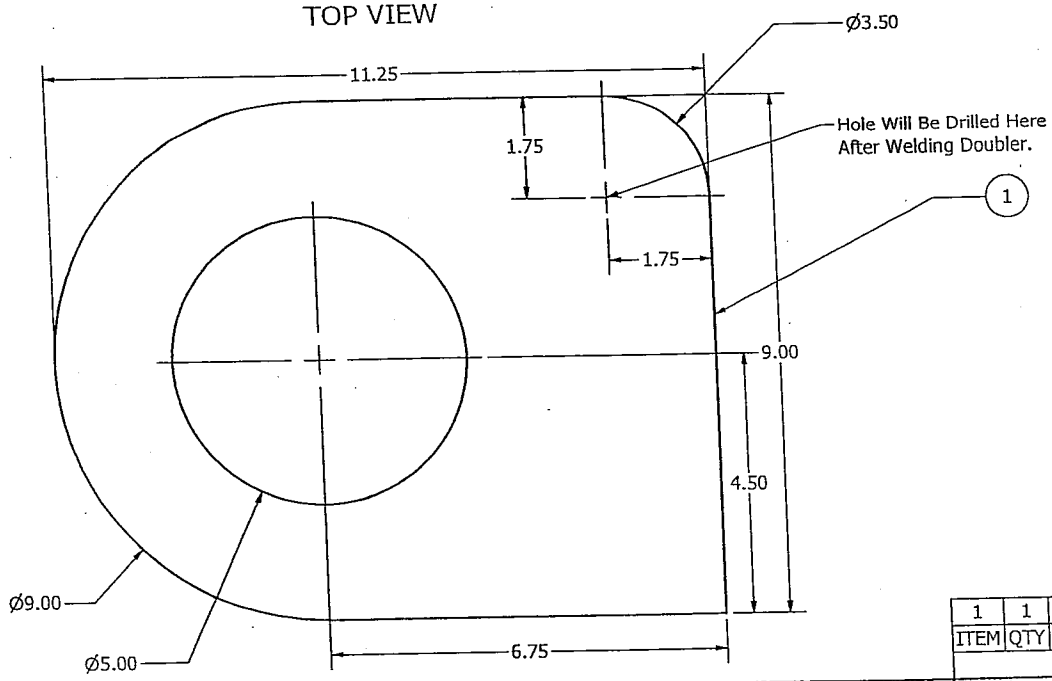

FRONT VIEW

ISOMETRIC VIEW

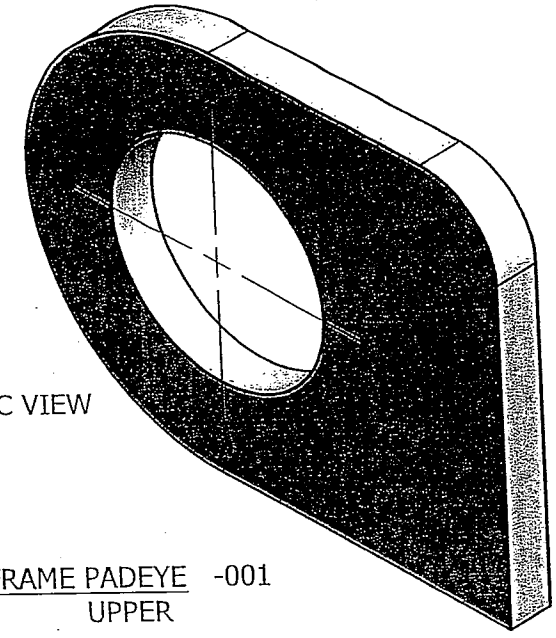

FRAME PADEYE -001
UPPER

ITEM	QTY	PART NUMBER	CONTROL #	DESCRIPTION
1	1	-	8412	PLATE, METAL, ALUMINUM 5086, 1.0 X 11.25 X 9.0

Parts List

UNLESS OTHERWISE SPECIFIED:
DIMENSIONS ARE IN INCHES
TOLERANCES
DECIMALS .XX +/- .05 .XXX +/-.010
ANGULAR +/- .5
DO NOT SCALE DRAWING

DRAWN	chuckc	10/5/2007
CHECKED		
QA		
MFG		
APPROVED		

NATIONAL DATA BUOY CENTER
John C. Stennis Space Center
Stennis Space Center, Mississippi,39529

TITLE
FRAME PADEYE

SIZE	DWG NO	REV
B	02.3F01154	

SCALE

SHEET 1 OF 2

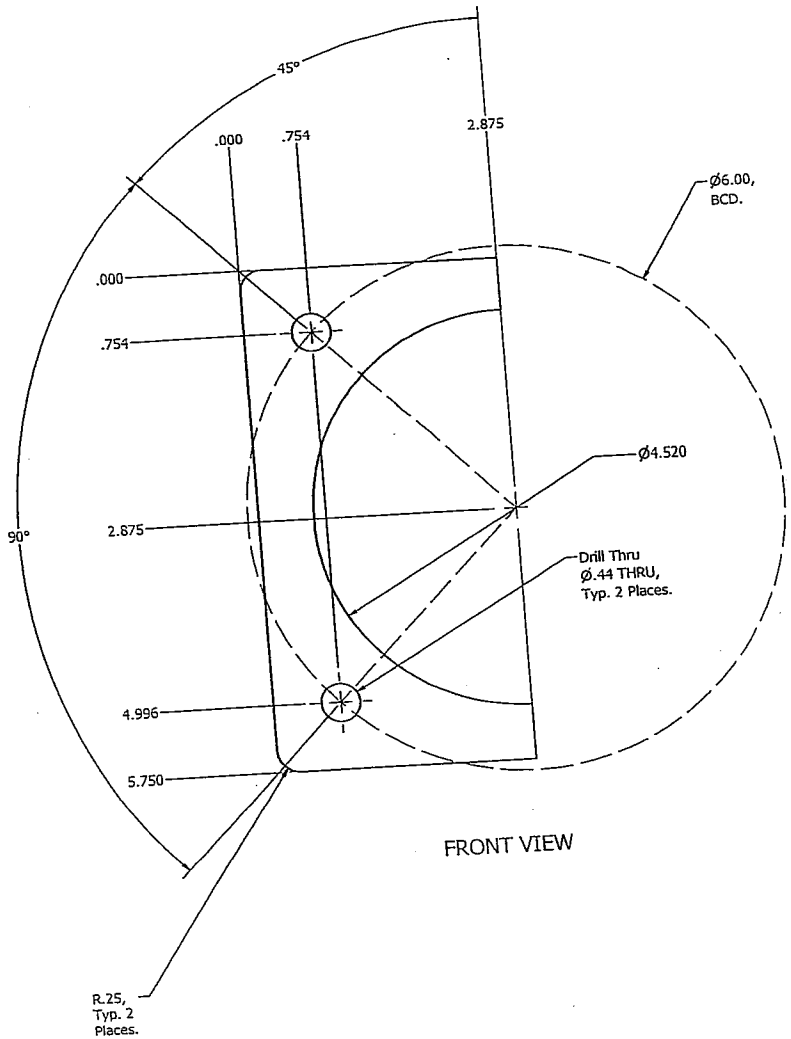

FRONT VIEW

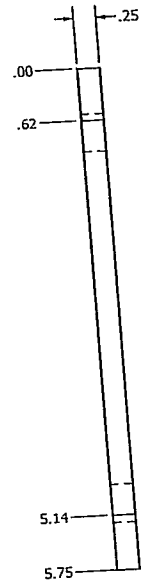

SIDE VIEW

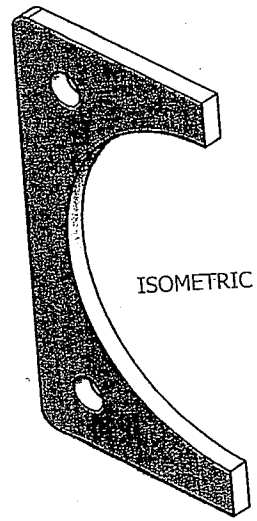

ISOMETRIC VIEW

PASS THRU RETAINER PLATE -001
FOR 4.0" PVC

ITEM	QTY	PART NUMBER	CONTROL #	DESCRIPTION
1	1	-	6955	PLATE, PVC, GREY, 5.75 X 2.88 X 0.25 THK

Parts List

UNLESS OTHERWISE SPECIFIED:
DIMENSIONS ARE IN INCHES
TOLERANCES
DECIMALS .XX +/- .05 .XXX +/-.010
ANGULAR +/- .5
DO NOT SCALE DRAWING

DRAWN	chuckc	10/26/2007
CHECKED		
QA		
MFG		
APPROVED		

NATIONAL DATA BUOY CENTER
John C. Stennis Space Center
Stennis Space Center, Mississippi,39529

TITLE
PASS THRU RETAINER PLATE

SIZE C | DWG NO 02.3F01153 | REV

SCALE | SHEET 1 OF 1

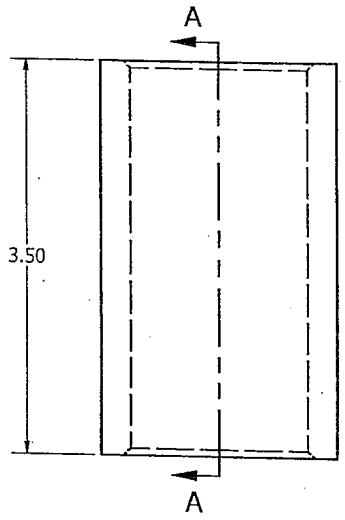

FRONT VIEW

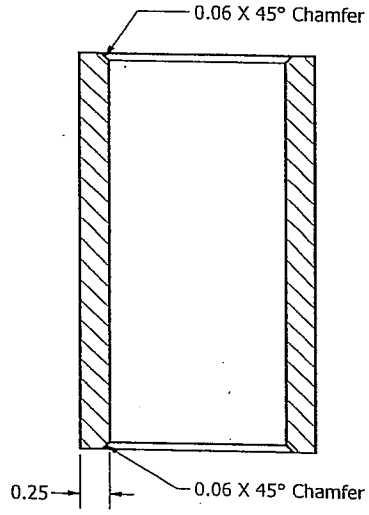

SECTION A-A

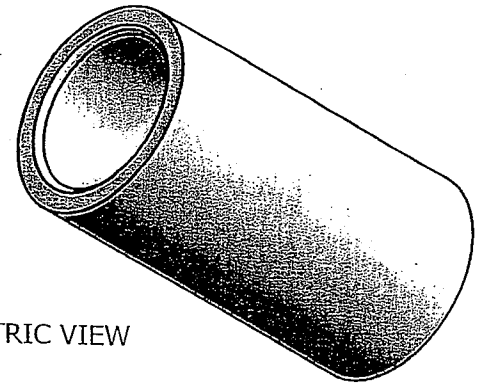

ISOMETRIC VIEW

FRAME THRU BOLT SLEEVE -001

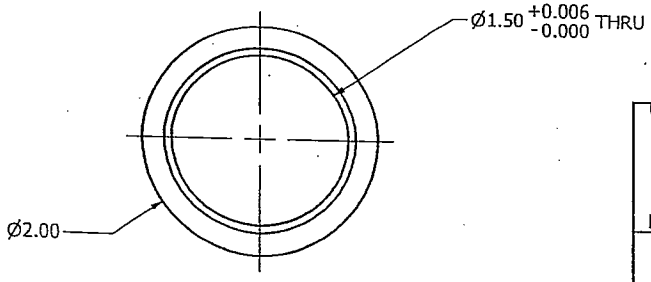

TOP & BOTTOM VIEW

UNLESS OTHERWISE SPECIFIED:
DIMENSIONS ARE IN INCHES
TOLERANCES

DECIMALS	ANGULAR
.XX +/- .05	+/- .5
.XXX +/-.010	

DO NOT SCALE DRAWING

ITEM	QTY	PART NUMBER	CONTROL #	DESCRIPTION
1	1	-	8418	BAR, ROUND, ALUMINUM-5086, 2.00 DIA X 3.50 LG

Parts List

DRAWN	T. RUTLEDGE	10/2/2007
CHECKED		
QA		
MFG		
APPROVED		

NATIONAL DATA BUOY CENTER
John C. Stennis Space Center
Stennis Space Center, Mississippi,39529

TITLE
FRAME THRU BOLT SLEEVE

SIZE	DWG NO	REV
B	02.3F01152	

SCALE

SHEET 1 OF 1

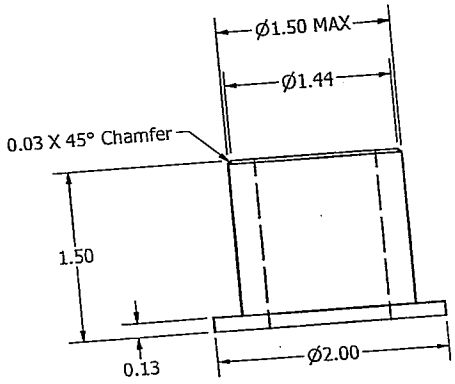

SIDE VIEW

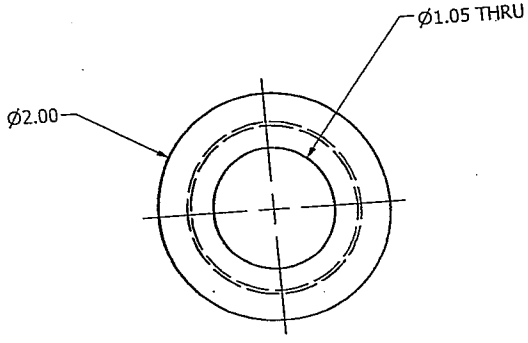

TOP VIEW

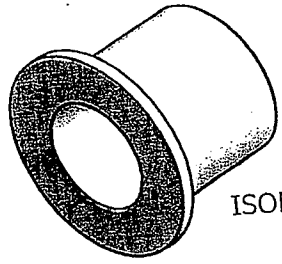

ISOMETRIC VIEW

FRAME THRU BOLT BUSHING -001

ITEM	QTY	PART NUMBER	CONTROL #	DESCRIPTION
1	1	McMASTER-CARR 8701K49	NSN	ROD, PLASTIC, UHMW POLYETHYLENE, WHITE, 2.00 OD X 1.50 LG, OR EQUIVALENT

Parts List

UNLESS OTHERWISE SPECIFIED:
DIMENSIONS ARE IN INCHES
TOLERANCES
DECIMALS .XX +/- .05 .XXX +/-.010
ANGULAR +/- .5
DO NOT SCALE DRAWING

DRAWN	T. RUTLEDGE	10/2/2007
CHECKED		
QA		
MFG		
APPROVED		

NATIONAL DATA BUOY CENTER
John C. Stennis Space Center
Stennis Space Center, Mississippi,39529

TITLE
FRAME THRU BOLT BUSHING

SIZE	DWG NO	REV
B	02.3F01151	

SCALE

SHEET 1 OF 1

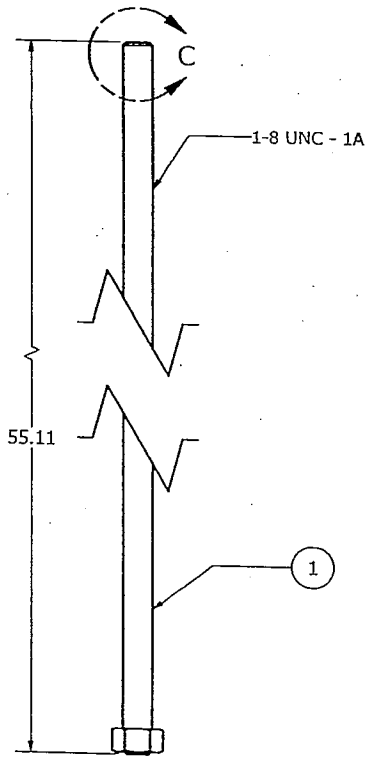

SIDE VIEW

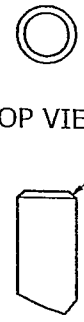

TOP VIEW

DETAIL C

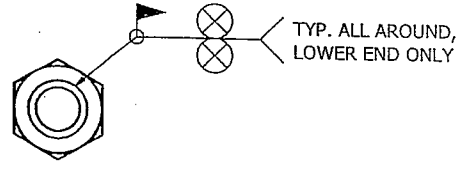

BOTTOM VIEW

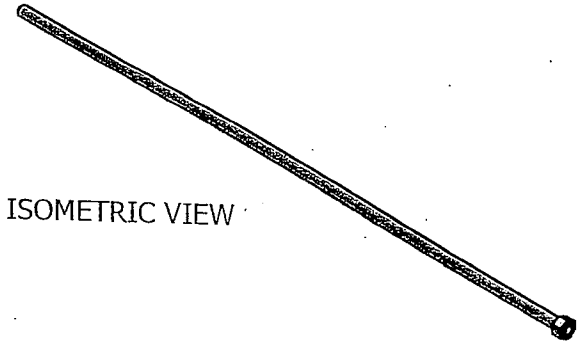

ISOMETRIC VIEW

FRAME THRU BOLT -001

ITEM	QTY	PART NUMBER	CONTROL #	DESCRIPTION
2	1	McMASTER-CARR 91850A038	5409	NUT, HEX, 316 SST, 1-8 UNC, NOT RATED
1	1	McMASTER-CARR 93565A150	5195	ROD, ALL THREAD, 316 SST, 1-8 UNC X 54.11 LG, STRAIN HARDNED

Parts List

UNLESS OTHERWISE SPECIFIED:
DIMENSIONS ARE IN INCHES
TOLERANCES
DECIMALS .XX +/- .05 .XXX +/-.010
ANGULAR +/- .5
DO NOT SCALE DRAWING

DRAWN	T. RUTLEDGE	10/2/2007
CHECKED		
QA		
MFG		
APPROVED		

NATIONAL DATA BUOY CENTER
John C. Stennis Space Center
Stennis Space Center, Mississippi,39529

TITLE
FRAME THRU BOLT

SIZE B | DWG NO 02.3F01150 | REV

SCALE | SHEET 1 OF 1

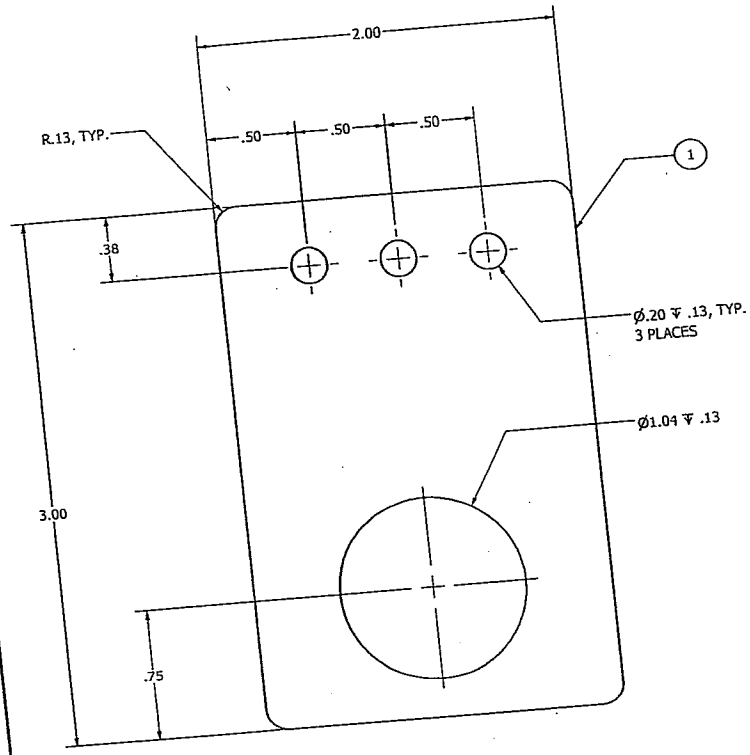

TOP VIEW

SIDE VIEW

ISOMETRIC VIEW

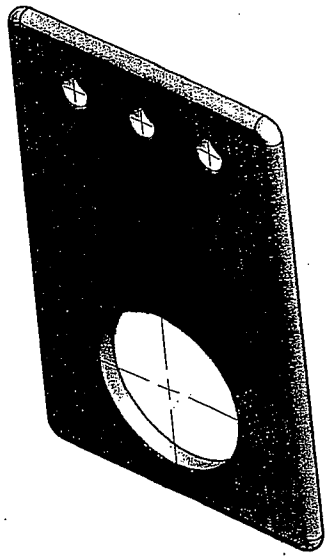

GROUNDING PLATE -001

ITEM	QTY	PART NUMBER	CONTROL #	DESCRIPTION
1	1	-	7349	PLATE, METAL, 316 SST, 0.125 X 3.0 X 2.0 (1/8")

Parts List

UNLESS OTHERWISE SPECIFIED:
DIMENSIONS ARE IN INCHES
TOLERANCES
DECIMALS .XX +/- .05 .XXX +/-.010
ANGULAR +/- .5
DO NOT SCALE DRAWING

DRAWN	danej	9/24/2008
CHECKED		
QA		
MFG		
APPROVED		

NATIONAL DATA BUOY CENTER
John C. Stennis Space Center
Stennis Space Center, Mississippi,39529

TITLE
GROUNDING PLATE

SIZE C
DWG NO 02.3F01149
REV
SCALE
SHEET 1 OF 1

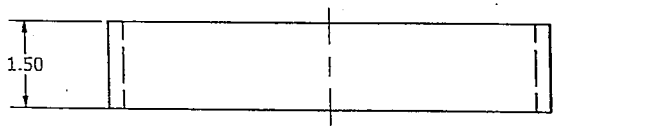

TOP VIEW

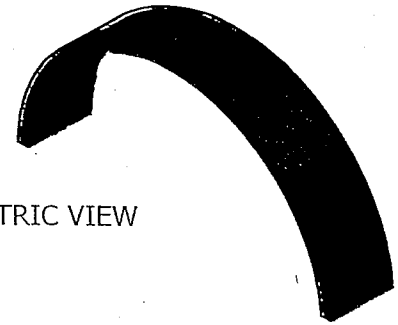

ISOMETRIC VIEW

ADCP CLAMP RUBBER -001

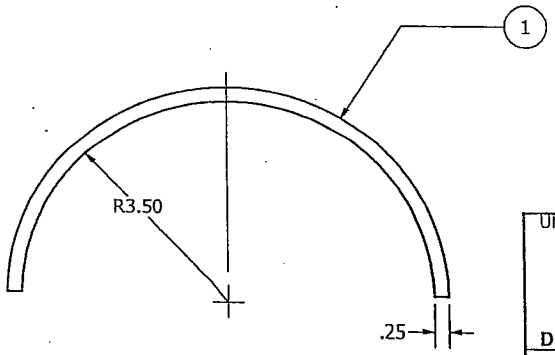

FRONT VIEW

UNLESS OTHERWISE SPECIFIED:
DIMENSIONS ARE IN INCHES
TOLERANCES

DECIMALS	ANGULAR
.XX +/- .05	+/- .5
.XXX +/-.010	

DO NOT SCALE DRAWING

ITEM	QTY	PART NUMBER	CONTROL #	DESCRIPTION
1	1	-	2115	GASKET, RUBBER, 0.25 X 1.50 X 11.75

Parts List

DRAWN	T. RUTLEDGE	10/17/2007
CHECKED		
QA		
MFG		
APPROVED		

NATIONAL DATA BUOY CENTER
John C. Stennis Space Center
Stennis Space Center, Mississippi,39529

TITLE

ADCP CLAMP RUBBER

SIZE	DWG NO	REV
B	02.3F01147	

SCALE

SHEET 1 OF 1

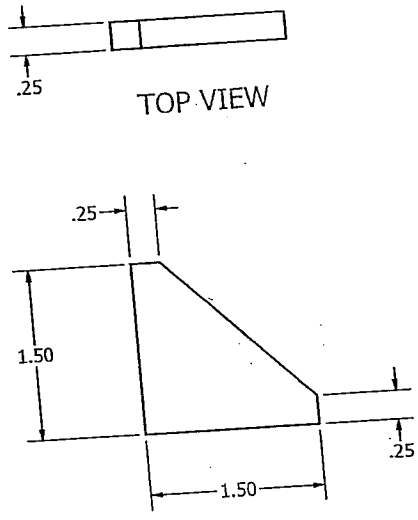

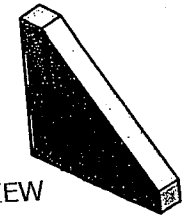

ISOMETRIC VIEW

ADCP BRACKET GUSSET -001

ITEM	QTY	PART NUMBER	CONTROL #	DESCRIPTION
1	1	-	6616	PLATE, ALUMINUM 5086, 0.25 X 1.50 X 1.50

Parts List

UNLESS OTHERWISE SPECIFIED:
DIMENSIONS ARE IN INCHES
TOLERANCES
DECIMALS
.XX +/- .05
.XXX +/-.010
ANGULAR
+/- .5
DO NOT SCALE DRAWING

DRAWN	T. RUTLEDGE	10/17/2007
CHECKED		
QA		
MFG		
APPROVED		

NATIONAL DATA BUOY CENTER
John C. Stennis Space Center
Stennis Space Center, Mississippi,39529

TITLE
ADCP BRACKET GUSSET

SIZE B | DWG NO 02.3F01146 | REV

SCALE | SHEET 1 OF 1

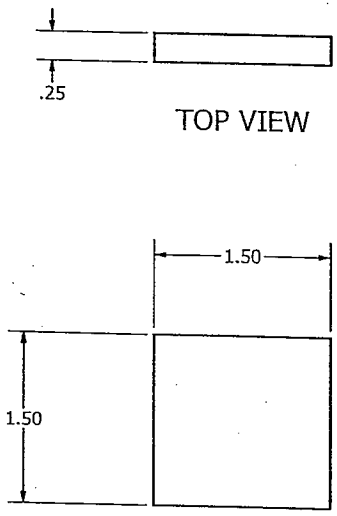

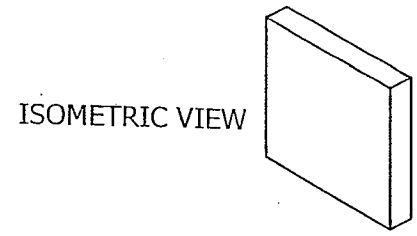

ADCP BRACKET PAD BACKING -001

ITEM	QTY	PART NUMBER	CONTROL #	DESCRIPTION
1	1	-	6616	PLATE, ALUMINUM 5086, 0.25 X 1.50 X 1.50

Parts List

UNLESS OTHERWISE SPECIFIED:
DIMENSIONS ARE IN INCHES
TOLERANCES

DECIMALS	ANGULAR
.XX +/- .05	+/- .5
.XXX +/-.010	

DO NOT SCALE DRAWING

DRAWN	T. RUTLEDGE	10/17/2007
CHECKED		
QA		
MFG		
APPROVED		

NATIONAL DATA BUOY CENTER
John C. Stennis Space Center
Stennis Space Center, Mississippi,39529

TITLE

ADCP BRACKET PAD BACKING

SIZE	DWG NO	REV
B	02.3F01145	

SCALE

SHEET 1 OF 1

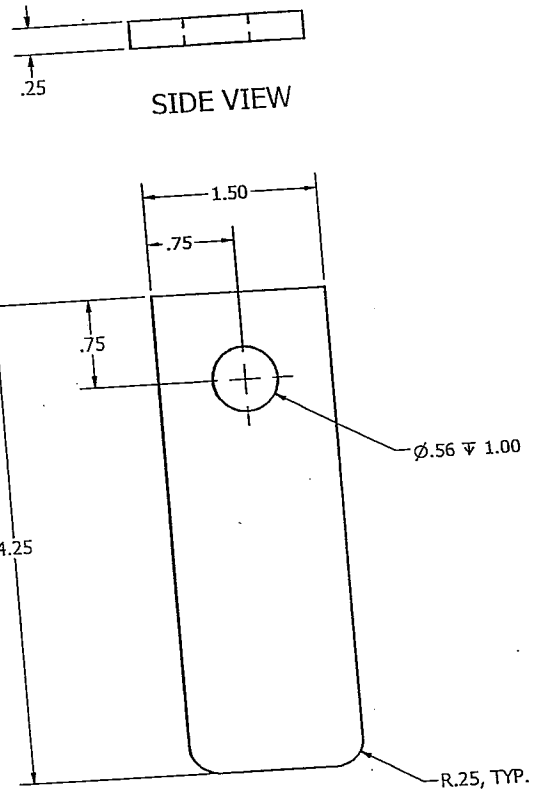

ADCP BRACKET PAD -001

ITEM	QTY	PART NUMBER	CONTROL #	DESCRIPTION
1	1	-	6616	PLATE, ALUMINUM 5086, 0.25 X 1.50 X 4.25

Parts List

UNLESS OTHERWISE SPECIFIED:
DIMENSIONS ARE IN INCHES
TOLERANCES
DECIMALS .XX +/- .05 .XXX +/-.010
ANGULAR +/- .5
DO NOT SCALE DRAWING

DRAWN	T. RUTLEDGE	10/17/2007
CHECKED		
QA		
MFG		
APPROVED		

NATIONAL DATA BUOY CENTER
John C. Stennis Space Center
Stennis Space Center, Mississippi,39529

TITLE
ADCP BRACKET PAD

SIZE B | DWG NO 02.3F01144 | REV

SCALE | SHEET 1 OF 1

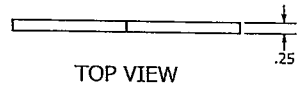

TOP VIEW

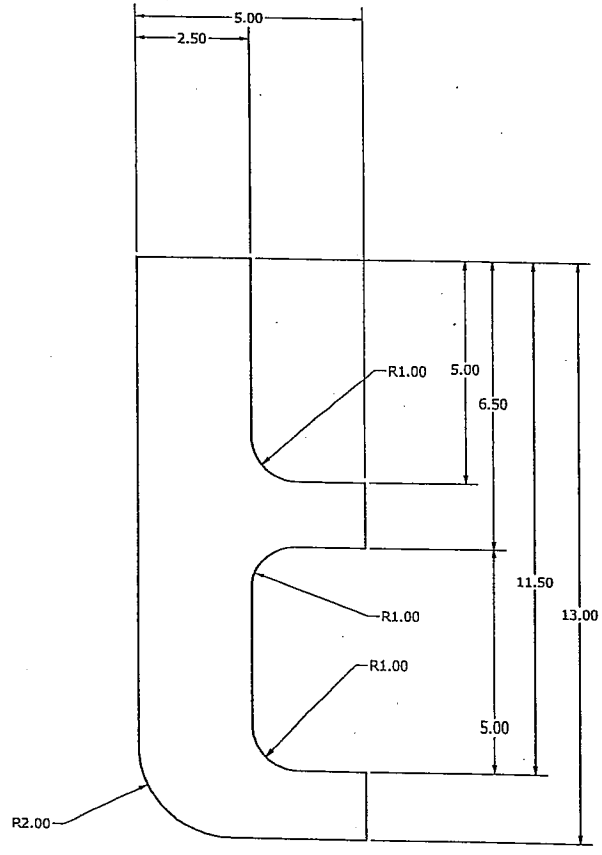

FRONT VIEW

ISOMETRIC VIEW

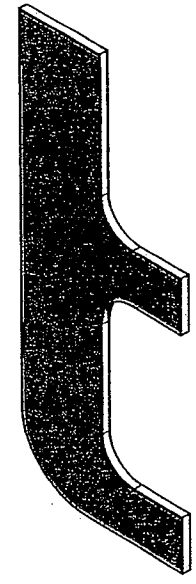

ADCP BRACKET RISER -001

ITEM	QTY	PART NUMBER	CONTROL #	DESCRIPTION
1	1	-	6616	PLATE, ALUMINUM 5086, 0.25 X 5.0 X 13.00

Parts List

UNLESS OTHERWISE SPECIFIED:
DIMENSIONS ARE IN INCHES
TOLERANCES
DECIMALS .XX +/- .05 .XXX +/-.010
ANGULAR +/- .5
DO NOT SCALE DRAWING

DRAWN	T. RUTLEDGE	10/17/2007
CHECKED		
QA		
MFG		
APPROVED		

NATIONAL DATA BUOY CENTER
John C. Stennis Space Center
Stennis Space Center, Mississippi,39529

TITLE
ADCP BRACKET RISER

SIZE	DWG NO	REV
C	02.3F01143	

SCALE

SHEET 1 OF 1

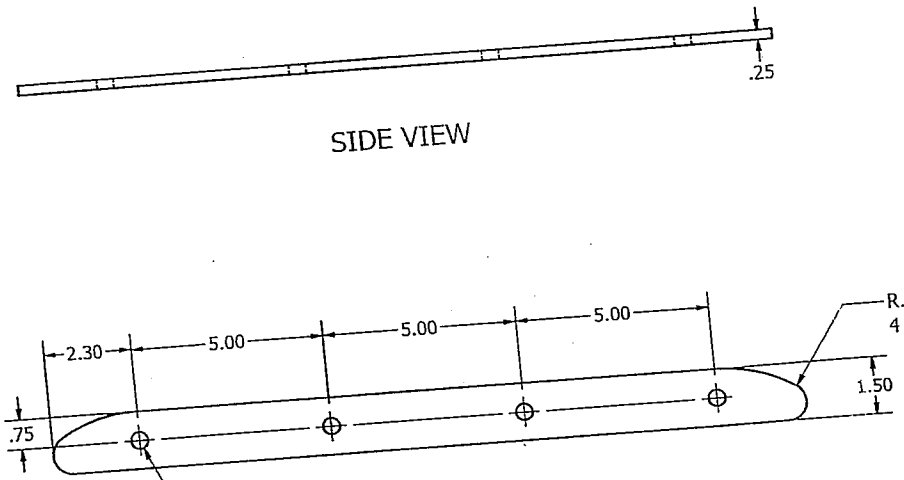

SIDE VIEW

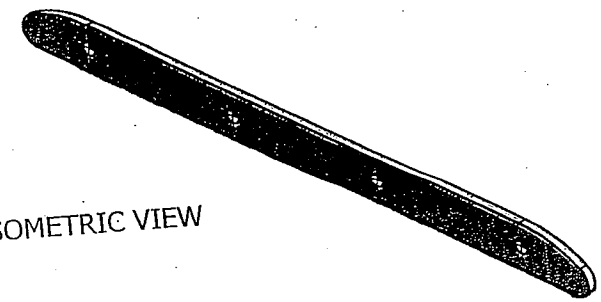

ISOMETRIC VIEW

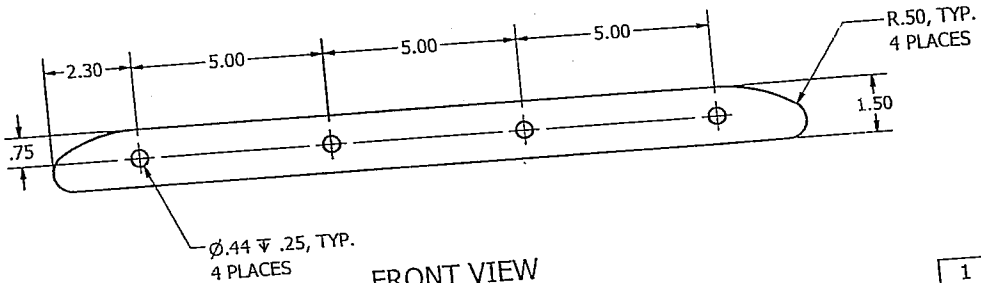

FRONT VIEW

LOWER WELL WINDOW RETAINER -001

ITEM	QTY	PART NUMBER	CONTROL #	DESCRIPTION
1	1	-	8318	PLATE, 316 SST, 0.25 X 20.0 X 1.50

Parts List

UNLESS OTHERWISE SPECIFIED:
DIMENSIONS ARE IN INCHES
TOLERANCES
DECIMALS .XX +/- .05 .XXX +/-.010
ANGULAR +/- .5
DO NOT SCALE DRAWING

DRAWN	djaynes	9/24/2008
CHECKED		
QA		
MFG		
APPROVED		

NATIONAL DATA BUOY CENTER
John C. Stennis Space Center
Stennis Space Center, Mississippi,39529

TITLE
LOWER WELL WINDOW RETAINER

SIZE	DWG NO	REV
B	02.3F01142	

SCALE 1 — SHEET 1 OF 1

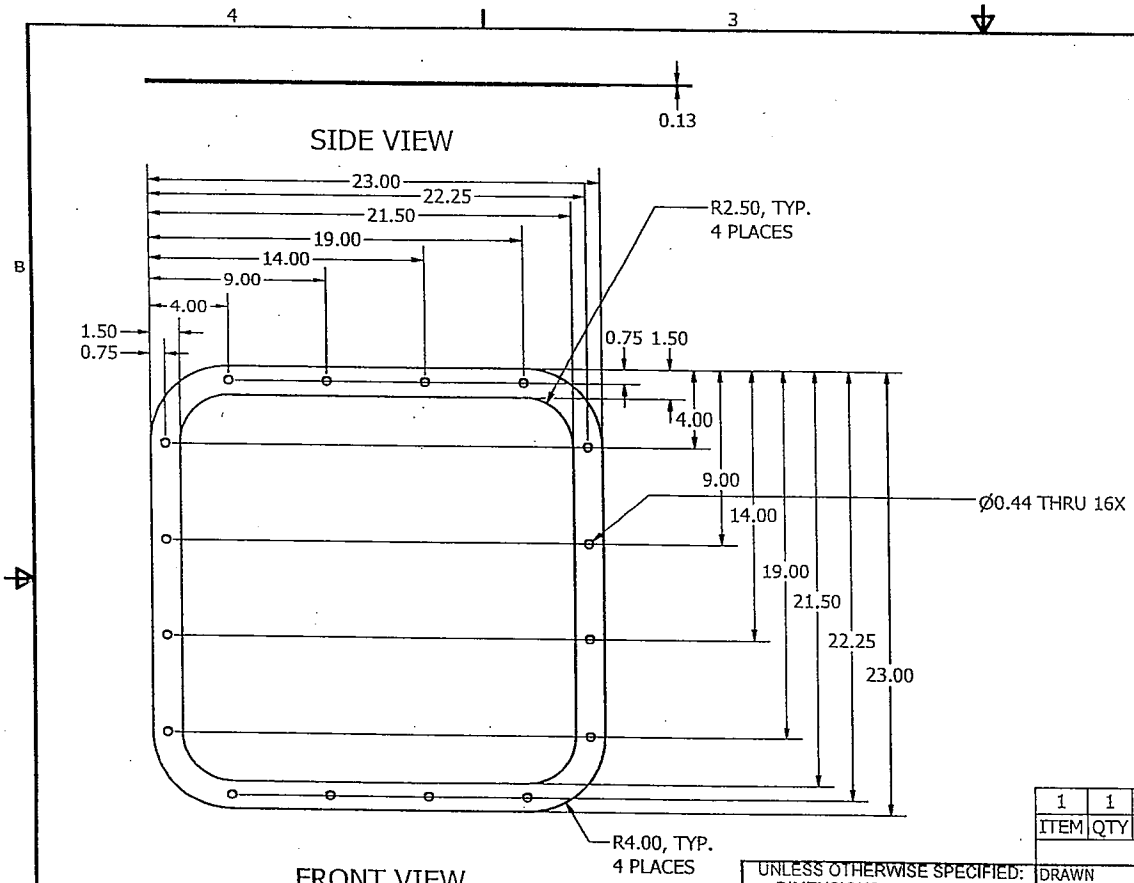

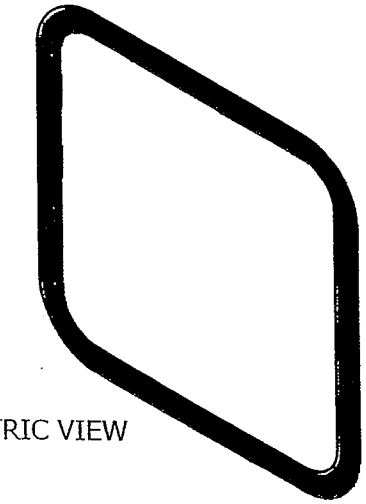

LOWER WELL BOTTOM GASKET -001

ITEM	QTY	PART NUMBER	CONTROL #	DESCRIPTION
1	1	-	2156	GASKET, RUBBER, 0.125 X 23.0 X 23.0

Parts List

UNLESS OTHERWISE SPECIFIED:
DIMENSIONS ARE IN INCHES
TOLERANCES
DECIMALS .XX +/- .05 .XXX +/-.010
ANGULAR +/- .5
DO NOT SCALE DRAWING

DRAWN	T. RUTLEDGE	10/3/2007
CHECKED		
QA		
MFG		
APPROVED		

NATIONAL DATA BUOY CENTER
John C. Stennis Space Center
Stennis Space Center, Mississippi,39529

TITLE
LOWER WELL BOTTOM GASKET

SIZE	DWG NO	REV
B	02.3F01141	

SCALE

SHEET 1 OF 1

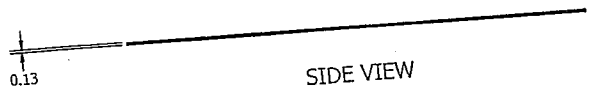

SIDE VIEW

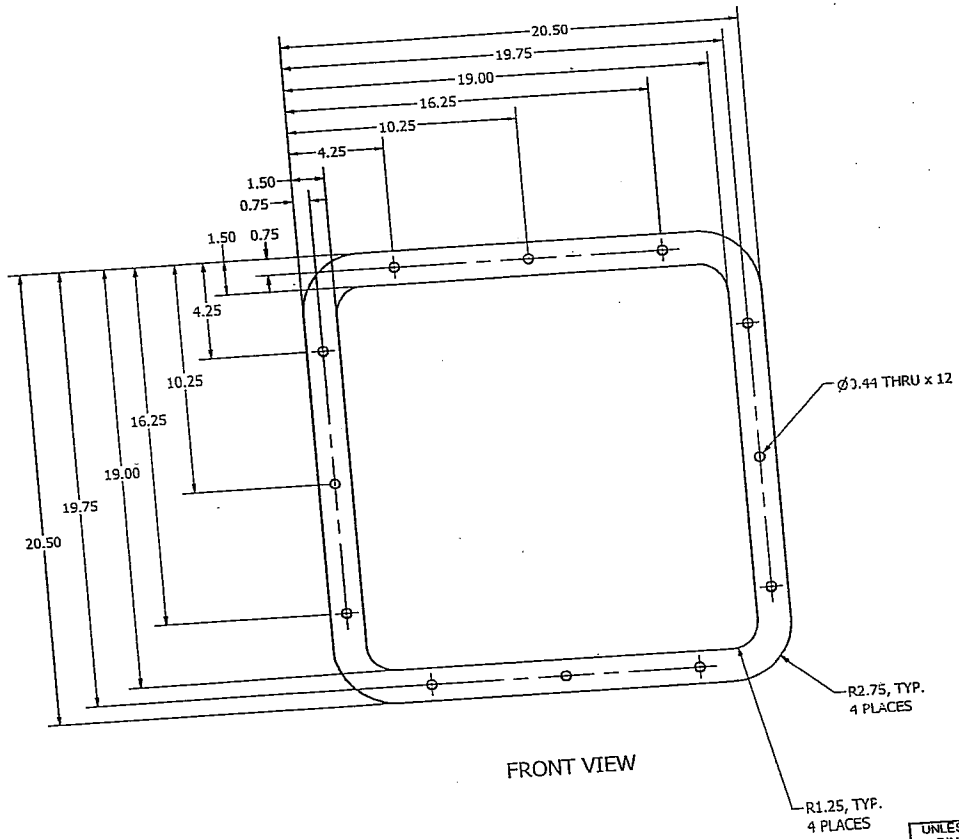

FRONT VIEW

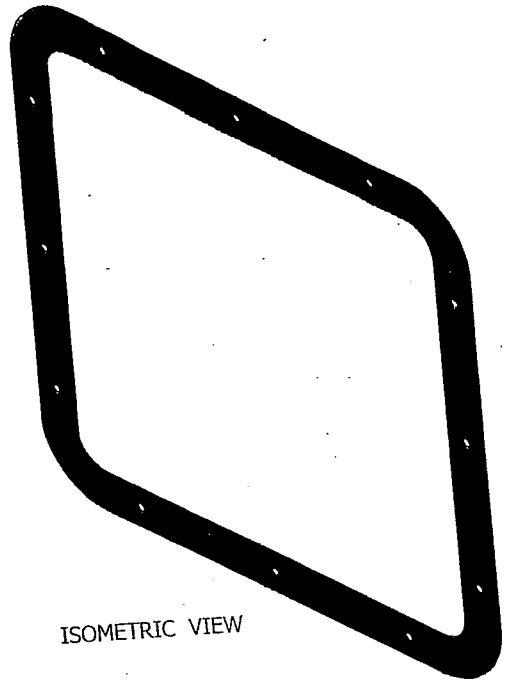

ISOMETRIC VIEW

LOWER WELL TOP GASKET -001

ITEM	QTY	PART NUMBER	CONTROL #	DESCRIPTION
1	1	-	2156	GASKET, RUBBER, 0.125 X 20.5 X 20.5

Parts List

UNLESS OTHERWISE SPECIFIED:
DIMENSIONS ARE IN INCHES
TOLERANCES
DECIMALS .XX +/- .05 .XXX +/-.010
ANGULAR +/- .5
DO NOT SCALE DRAWING

DRAWN	chuckc	10/3/2007
CHECKED		
QA		
MFG		
APPROVED		

NATIONAL DATA BUOY CENTER
John C. Stennis Space Center
Stennis Space Center, Mississippi,39529

TITLE
LOWER WELL TOP GASKET

SIZE C | DWG NO 02.3F01140 | REV

SCALE | SHEET 1 OF 1

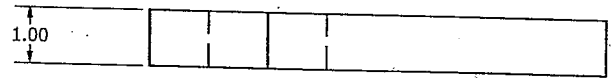

SIDE VIEW

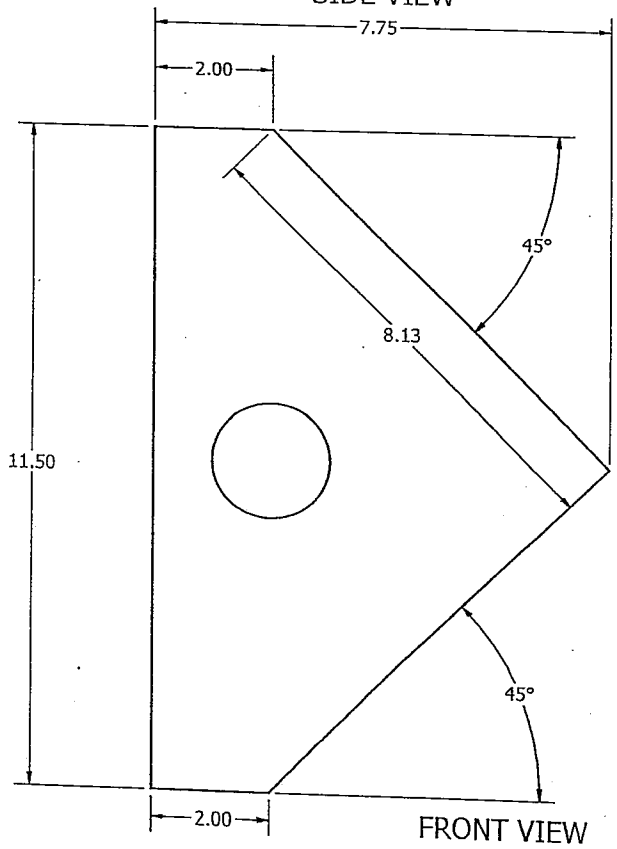

FRONT VIEW

ISOMETRIC VIEW

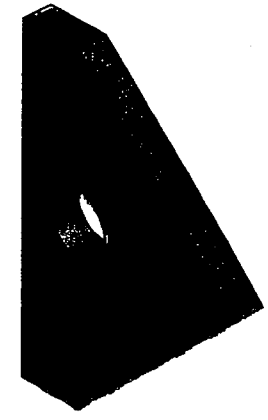

LOWER WELL LID LINING -001

ITEM	QTY	PART NUMBER	CONTROL #	DESCRIPTION
1	1	-	8495	SHEET, RUBBER, NEOPRENE, 60 DURO, 1.00 X 7.75 X 11.50

Parts List

UNLESS OTHERWISE SPECIFIED:
DIMENSIONS ARE IN INCHES
TOLERANCES
DECIMALS .XX +/- .05 .XXX +/-.010
ANGULAR +/- .5
DO NOT SCALE DRAWING

DRAWN	T. RUTLEDGE	10/3/2007
CHECKED		
QA		
MFG		
APPROVED		

NATIONAL DATA BUOY CENTER
John C. Stennis Space Center
Stennis Space Center, Mississippi,39529

TITLE
LOWER WELL LID LINING

SIZE	DWG NO	REV
B	02.3F01139	

SCALE

SHEET 1 OF 1

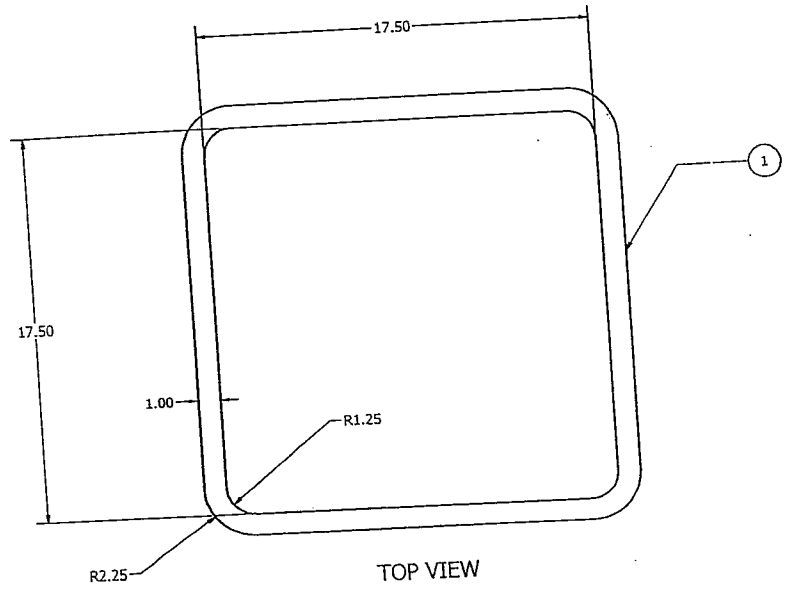

TOP VIEW

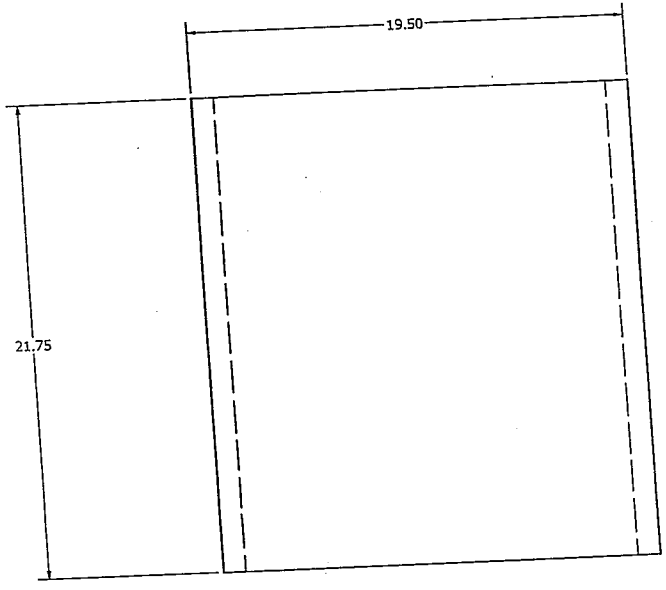

FRONT VIEW

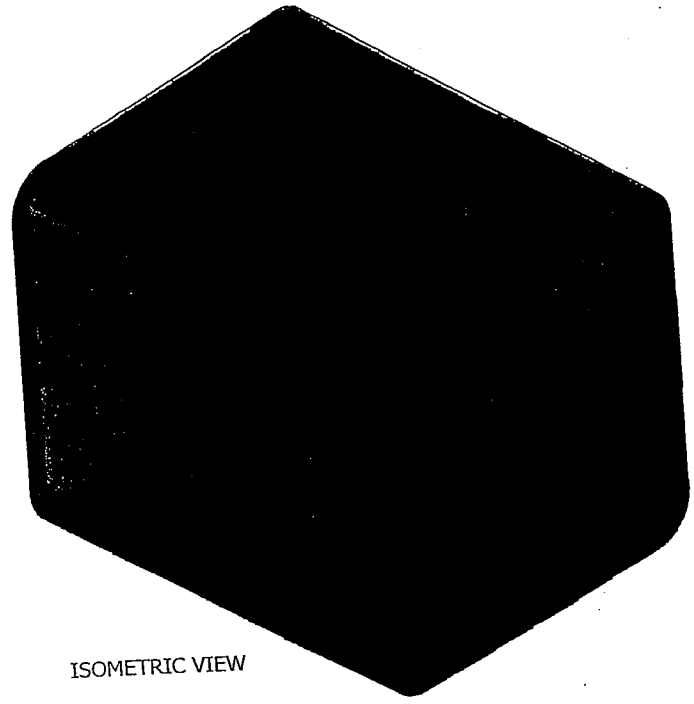

ISOMETRIC VIEW

LOWER WELL LINNING -001

ITEM	QTY	PART NUMBER	CONTROL #	DESCRIPTION
1	1	-	8495	SHEET, RUBBER, NEOPRENE, 60 DURO, 1.00 X 21.75 X 74.13LG.

Parts List

UNLESS OTHERWISE SPECIFIED:
DIMENSIONS ARE IN INCHES
TOLERANCES
DECIMALS .XX +/- .05 .XXX +/-.010
ANGULAR +/- .5
DO NOT SCALE DRAWING

DRAWN	T. RUTLEDGE	10/3/2007
CHECKED		
QA		
MFG		
APPROVED		

NATIONAL DATA BUOY CENTER
John C. Stennis Space Center
Stennis Space Center, Mississippi,39529

TITLE: LOWER WELL LINNING

SIZE: C | DWG NO: 02.3F01138 | REV

SCALE | SHEET 1 OF 1

END VIEW

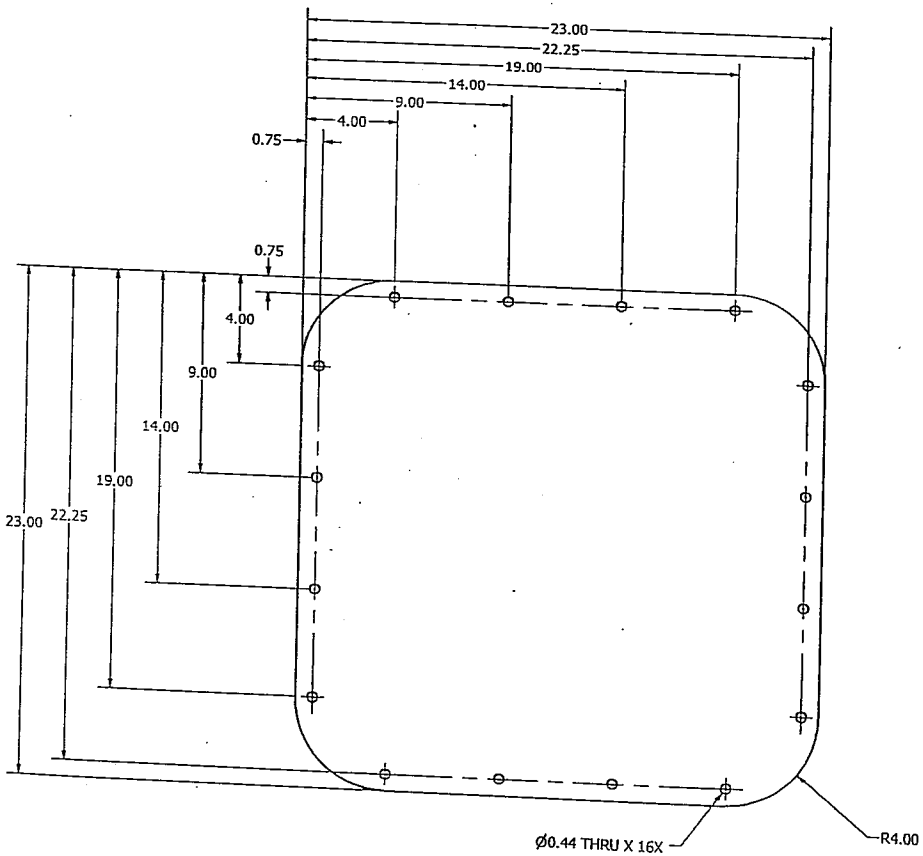

FRONT VIEW

ISOMETRIC VIEW

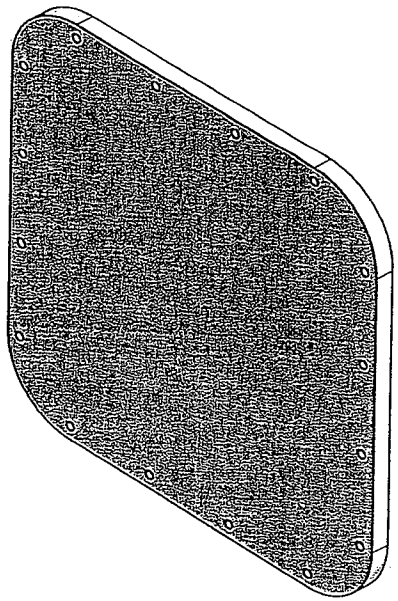

LOWER WELL WINDOW -001

ITEM	QTY	PART NUMBER	CONTROL #	DESCRIPTION
1	1	-	8620	SHEET, PLASTIC, POLYETHYLENE LOW DENSITY TRANSLUCENT, 23.00 X 23.00 X 1.0

Parts List

UNLESS OTHERWISE SPECIFIED:
DIMENSIONS ARE IN INCHES
TOLERANCES
DECIMALS .XX +/- .05 .XXX +/-.010
ANGULAR +/- .5
DO NOT SCALE DRAWING

DRAWN	T. RUTLEDGE	10/3/2007
CHECKED		
QA		
MFG		
APPROVED		

NATIONAL DATA BUOY CENTER
John C. Stennis Space Center
Stennis Space Center, Mississippi,39529

TITLE
LOWER WELL WINDOW

SIZE C | DWG NO 02.3F01137 | REV

SCALE | SHEET 1 OF 1

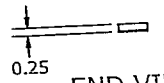

END VIEW

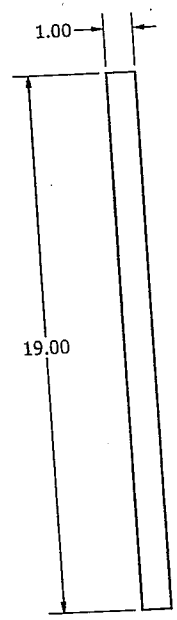

FRONT VIEW

ISOMETRIC VIEW

LOWER WELL LID STIFFENER -002
(19.00)

ITEM	QTY	PART NUMBER	CONTROL #	DESCRIPTION
1	1	-	8413	BAR, FLAT, ALUMINUM 5086, 0.25 X 1.00 X 19.00

Parts List

UNLESS OTHERWISE SPECIFIED:
DIMENSIONS ARE IN INCHES
TOLERANCES
DECIMALS .XX +/- .05 .XXX +/-.010
ANGULAR +/- .5
DO NOT SCALE DRAWING

DRAWN	T. RUTLEDGE	10/3/2007
CHECKED		
QA		
MFG		
APPROVED		

NATIONAL DATA BUOY CENTER
John C. Stennis Space Center
Stennis Space Center, Mississippi,39529

TITLE
LOWER WELL LID STIFFENER

SIZE	DWG NO	REV
B	02.3F01136	

SCALE

SHEET 2 OF 2

END VIEW

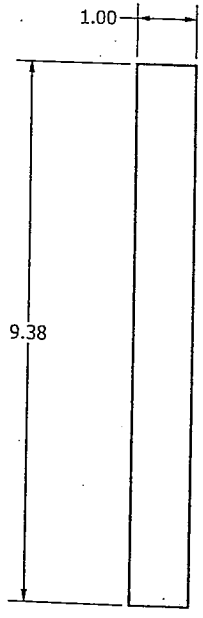

FRONT VIEW

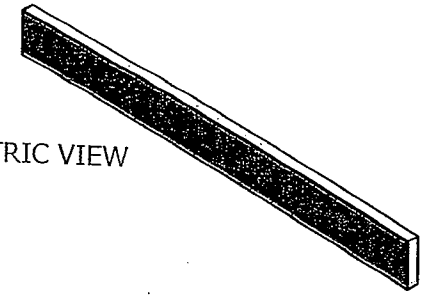

ISOMETRIC VIEW

LOWER WELL LID STIFFENER -001
(9.38)

ITEM	QTY	PART NUMBER	CONTROL #	DESCRIPTION
1	1	-	8413	BAR, FLAT, ALUMINUM 5086, 0.25 X 1.00 X 9.38

Parts List

UNLESS OTHERWISE SPECIFIED:
DIMENSIONS ARE IN INCHES
TOLERANCES
DECIMALS .XX +/- .05 .XXX +/-.010
ANGULAR +/- .5
DO NOT SCALE DRAWING

DRAWN	T. RUTLEDGE	10/3/2007
CHECKED		
QA		
MFG		
APPROVED		

NATIONAL DATA BUOY CENTER
John C. Stennis Space Center
Stennis Space Center, Mississippi,39529

TITLE
LOWER WELL LID STIFFENER

SIZE	DWG NO	REV
B	02.3F01136	

SCALE

SHEET 1 OF 2

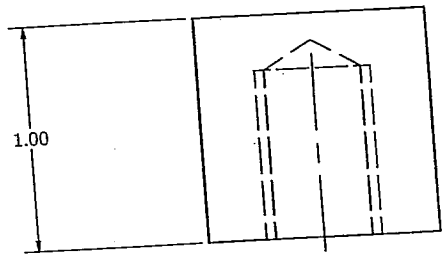

SIDE VIEW

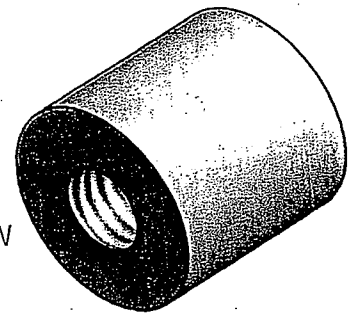

ISOMETRIC VIEW

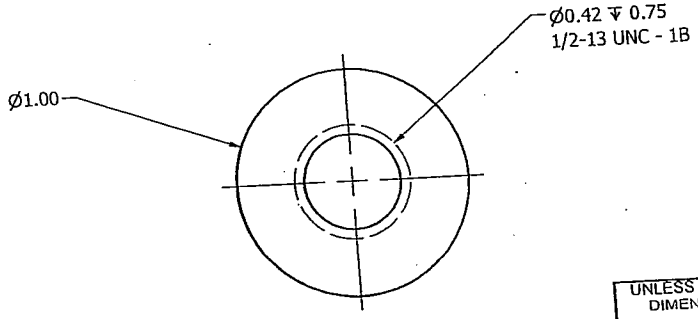

FRONT VIEW

LOWER WELL THREADED DOWEL -001

ITEM	QTY	PART NUMBER	CONTROL #	DESCRIPTION
1	1	-	8417	BAR, ROUND, ALUMINUM 5086, 1.00 DIA. X 1.00 LG.

Parts List

UNLESS OTHERWISE SPECIFIED:
DIMENSIONS ARE IN INCHES
TOLERANCES
DECIMALS .XX +/- .05 .XXX +/-.010
ANGULAR +/- .5
DO NOT SCALE DRAWING

DRAWN	T. RUTLEDGE	10/3/2007
CHECKED		
QA		
MFG		
APPROVED		

NATIONAL DATA BUOY CENTER
John C. Stennis Space Center
Stennis Space Center, Mississippi,39529

TITLE: LOWER WELL THREADED DOWEL

SIZE: B | DWG NO: 02.3F01135 | REV:

SCALE: | SHEET 1 OF 1

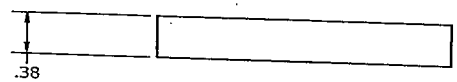

SIDE VIEW

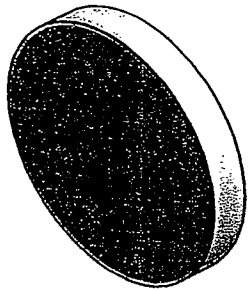

ISOMETRIC VIEW

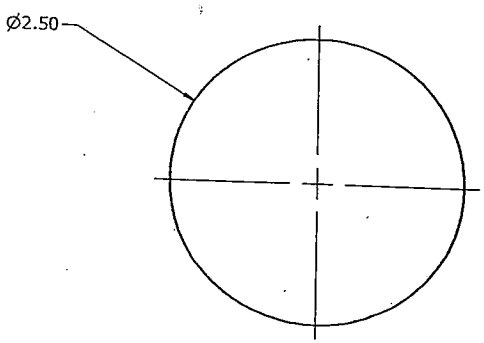

FRONT VIEW

LOWER WELL BULKHEAD DOUBLER -001

ITEM	QTY	PART NUMBER	CONTROL #	DESCRIPTION
1	1	-	8409	PLATE, ALUMINUM 5086, 0 .375 X 2.50 DIA.

Parts List

UNLESS OTHERWISE SPECIFIED:
DIMENSIONS ARE IN INCHES
TOLERANCES
DECIMALS .XX +/- .05 .XXX +/-.010
ANGULAR +/- .5
DO NOT SCALE DRAWING

DRAWN	T. RUTLEDGE	10/18/2007
CHECKED		
QA		
MFG		
APPROVED		

NATIONAL DATA BUOY CENTER
John C. Stennis Space Center
Stennis Space Center, Mississippi,39529

TITLE
LOWER WELL BULKHEAD DOUBLER

SIZE B | DWG NO 02.3F01134 | REV

SCALE | SHEET 1 OF 1

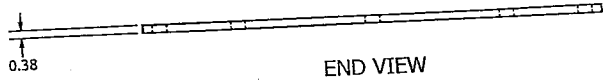

END VIEW

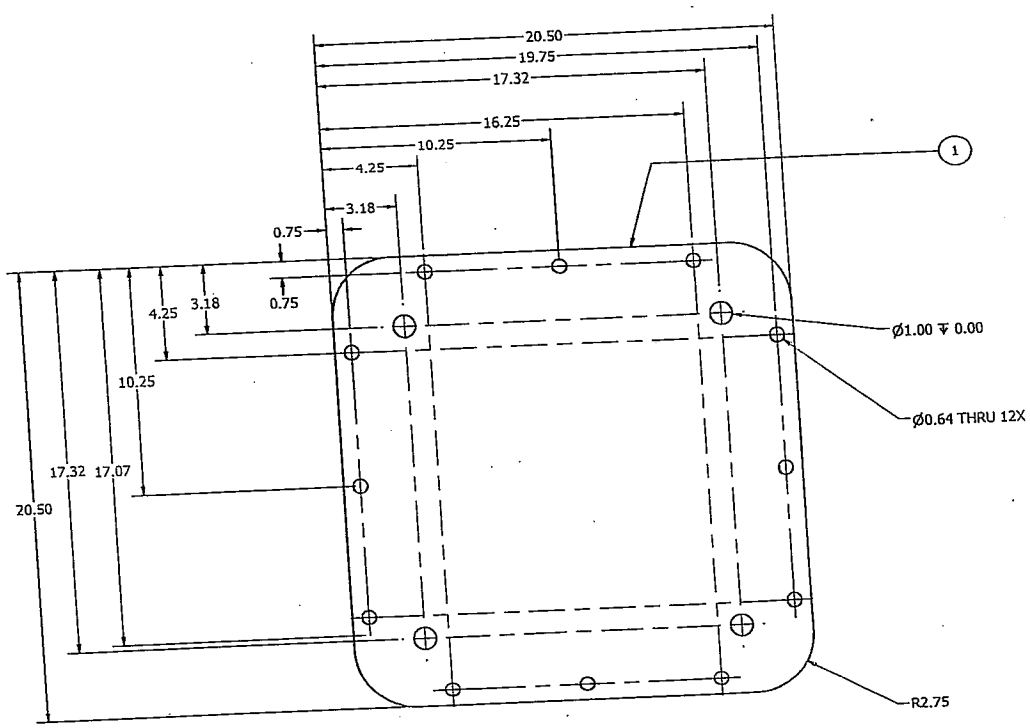

FRONT VIEW

ISOMETRIC VIEW

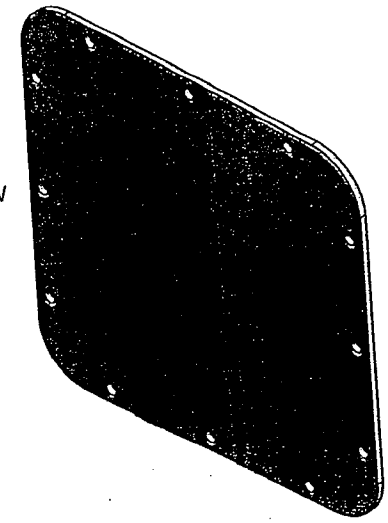

LOWER WELL LID PLATE -001

ITEM	QTY	PART NUMBER	DESCRIPTION	MATERIAL
1	1	Lower Well Lid Plate	Plate, 0.38 X 20.5 X 20.5	Aluminum-6061

Parts List

UNLESS OTHERWISE SPECIFIED:
DIMENSIONS ARE IN INCHES
TOLERANCES
DECIMALS .XX +/- .05 .XXX +/-.010
ANGULAR +/- .5
DO NOT SCALE DRAWING

DRAWN	T. RUTLEDGE	10/3/2007
CHECKED		
QA		
MFG		
APPROVED		

NATIONAL DATA BUOY CENTER
John C. Stennis Space Center
Stennis Space Center, Mississippi,39529

TITLE
LOWER WELL LID PLATE

SIZE C | DWG NO 02.3F01133 | REV

SCALE | SHEET 1 OF 1

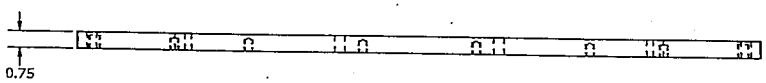

END VIEW

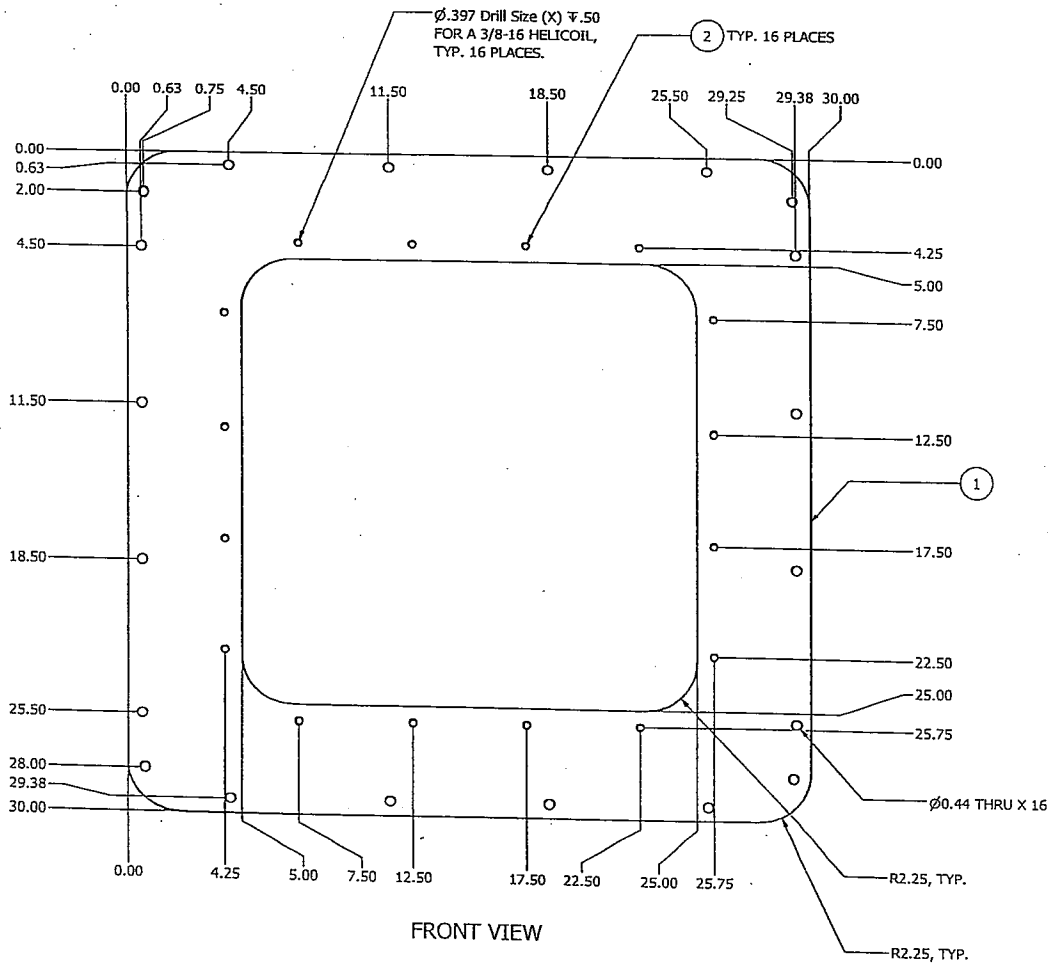

FRONT VIEW

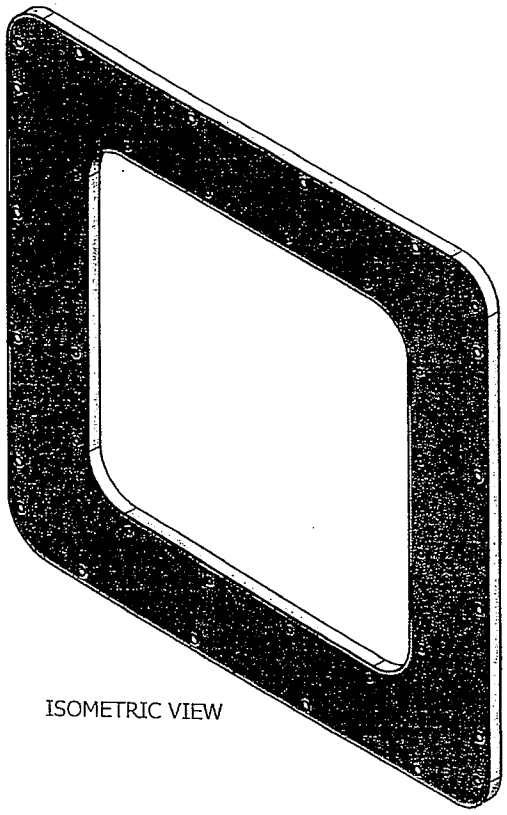

ISOMETRIC VIEW

LOWER WELL BOTTOM FLANGE -001

ITEM	QTY	PART NUMBER	CONTROL #	DESCRIPTION
2	16	McMASTER-CARR 91732A376	8462	INSERT, 316 SST, 3/8-16 HELICOIL, 0.375 LG.
1	1	-	8411	PLATE, ALUMINUM 5086, 0 .75 X 30.0 X 30.0

Parts List

UNLESS OTHERWISE SPECIFIED:
DIMENSIONS ARE IN INCHES
TOLERANCES
DECIMALS .XX +/- .05 .XXX +/-.010
ANGULAR +/- .5
DO NOT SCALE DRAWING

DRAWN	T. RUTLEDGE	10/3/2007
CHECKED		
QA		
MFG		
APPROVED	danej	

NATIONAL DATA BUOY CENTER
John C. Stennis Space Center
Stennis Space Center, Mississippi,39529

TITLE
LOWER WELL BOTTOM FLANGE

SIZE	DWG NO	REV
C	02.3F01132	1

SCALE

SHEET 1 OF 1

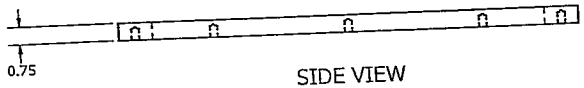

SIDE VIEW

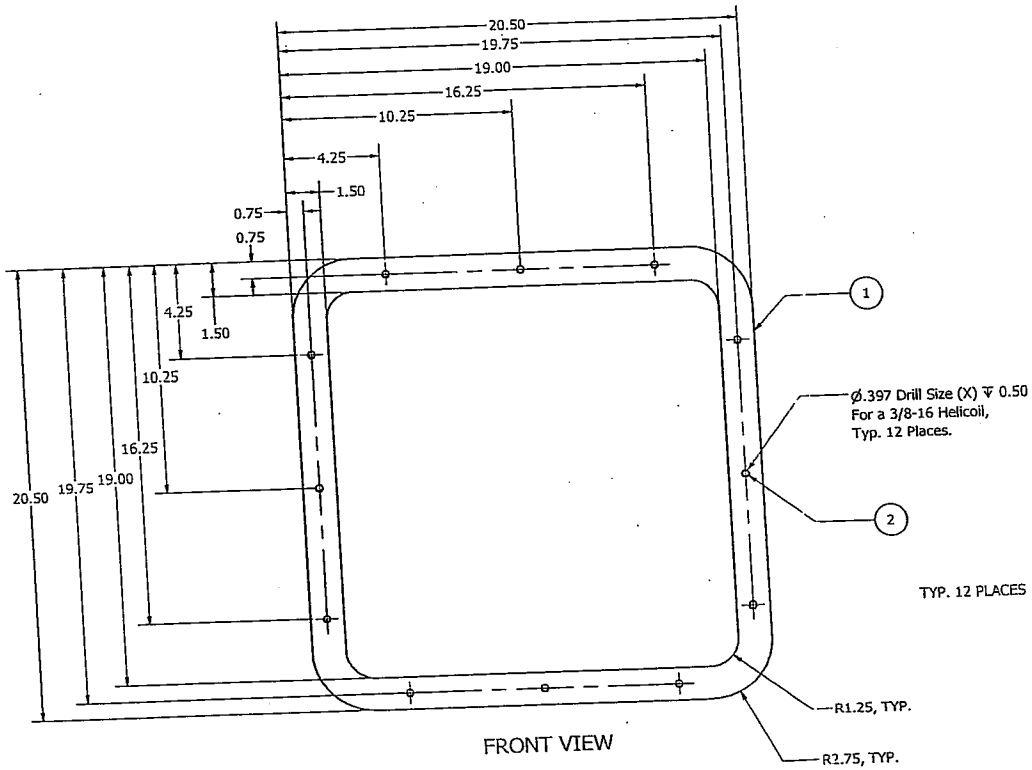

FRONT VIEW

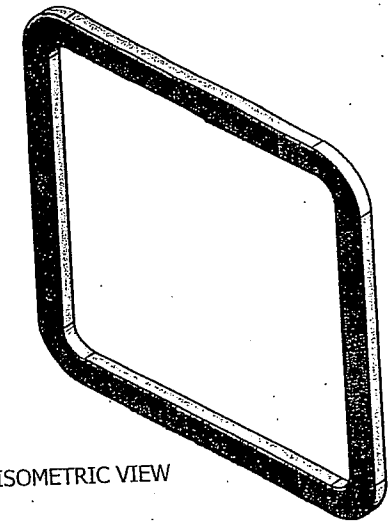

ISOMETRIC VIEW

LOWER WELL TOP FLANGE -001

ITEM	QTY	PART NUMBER	CONTROL #	DESCRIPTION
2	12	McMASTER-CARR 91732A376	8462	INSERT, 316 SST, HELICOIL, 3/8"-16 X 0.375" LG
1	1	-	8411	PLATE, METAL, ALUMINUM 5086, 0.75 X 20.50 X 20.50

Parts List

UNLESS OTHERWISE SPECIFIED:
DIMENSIONS ARE IN INCHES
TOLERANCES
DECIMALS .XX +/- .05 .XXX +/-.010
ANGULAR +/- .5
DO NOT SCALE DRAWING

DRAWN	chuckc	10/3/2007
CHECKED		
QA		
MFG		
APPROVED		

NATIONAL DATA BUOY CENTER
John C. Stennis Space Center
Stennis Space Center, Mississippi,39529

TITLE
LOWER WELL TOP FLANGE

SIZE C | DWG NO 02.3F01131 | REV

SCALE | SHEET 1 OF 1

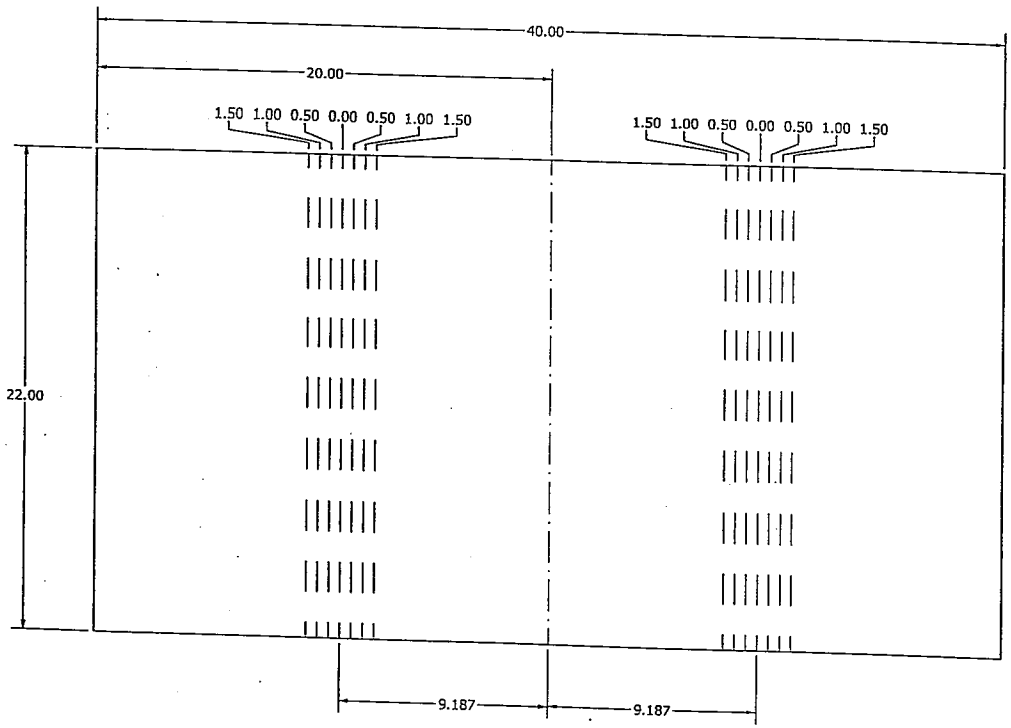

HALF SHELL BREAK-LINE VIEW

UNLESS OTHERWISE SPECIFIED: DIMENSIONS ARE IN INCHES TOLERANCES DECIMALS .XX +/- .05 .XXX +/-.010 ANGULAR +/- .5 DO NOT SCALE DRAWING	DRAWN chuckc	10/3/2007	NATIONAL DATA BUOY CENTER John C. Stennis Space Center Stennis Space Center, Mississippi,39529
	CHECKED		TITLE
	QA		LOWER WELL TUBE
	MFG		
	APPROVED		
			SIZE C / DWG NO 02.3F01130 / REV
			SCALE / SHEET 2 OF 2

NOTES:
1. See Half Shell Break-Line View on sheet 2 for plate layout.

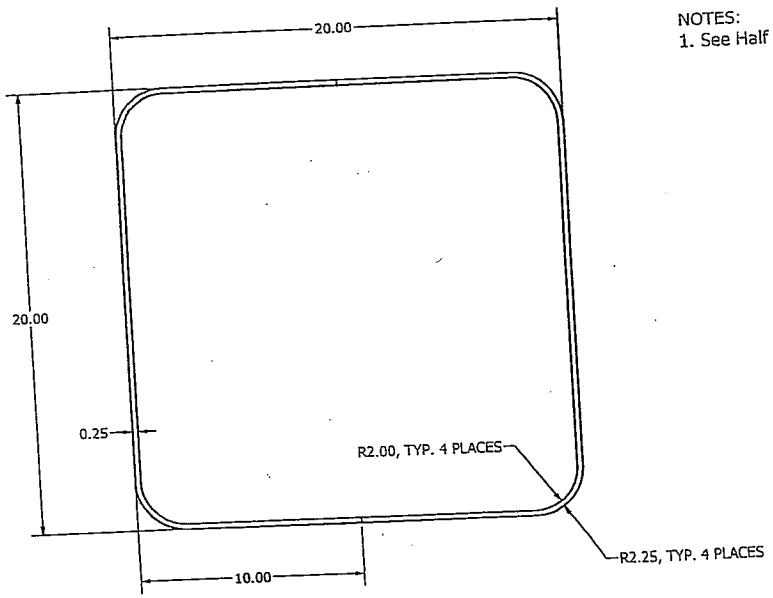

TOP VIEW

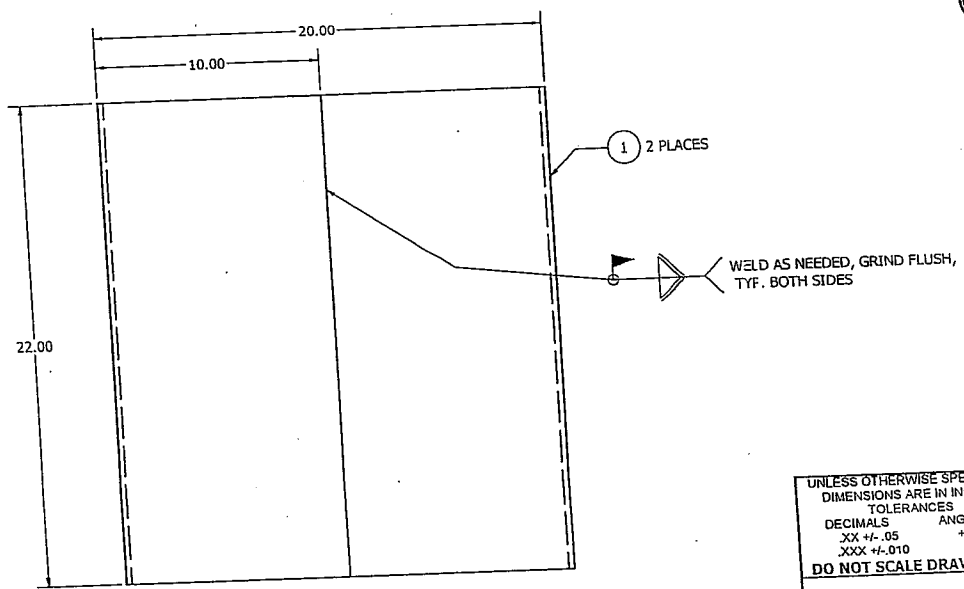

FRONT VIEW

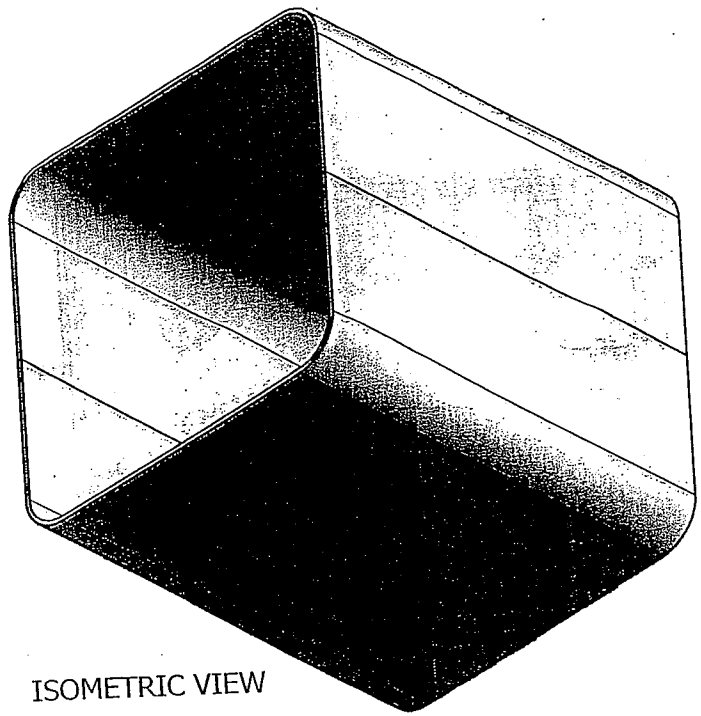

ISOMETRIC VIEW

LOWER WELL TUBE -001

ITEM	QTY	PART NUMBER	CONTROL #	DESCRIPTION
1	2	-	6616	PLATE, ALUMINUM 5086, 0.25 X 22.00 X 40.00

Parts List

UNLESS OTHERWISE SPECIFIED:
DIMENSIONS ARE IN INCHES
TOLERANCES
DECIMALS .XX +/- .05 .XXX +/-.010
ANGULAR +/- .5
DO NOT SCALE DRAWING

DRAWN	chuckc	10/3/2007
CHECKED		
QA		
MFG		
APPROVED		

NATIONAL DATA BUOY CENTER
John C. Stennis Space Center
Stennis Space Center, Mississippi,39529

TITLE
LOWER WELL TUBE

SIZE	DWG NO	REV
C	02.3F01130	

SCALE | SHEET 1 OF 2

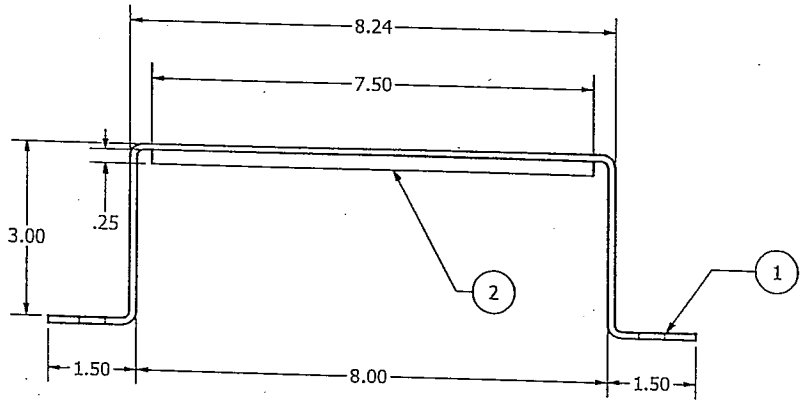

FRONT VIEW

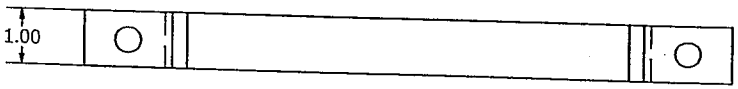

BOTTOM VIEW

ISOMETRIC VIEW

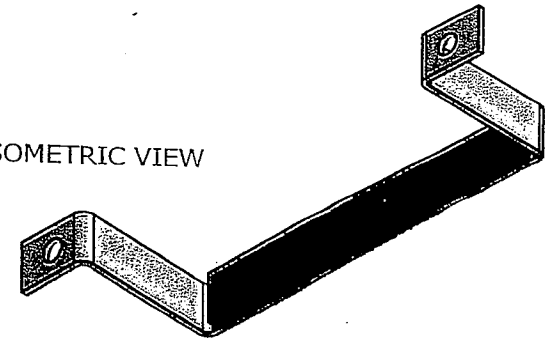

AUXILLARY POWER STRAP ASSEMBLY -001

ITEM	QTY	PART NUMBER	CONTROL #	DESCRIPTION
2	1	-	2115	GASKET, NEOPRENE 60 DURO, 0.25 X 7.50 X 1.00
1	1	02.3F01162-001		AUILLARY POWER STRAP

Parts List

UNLESS OTHERWISE SPECIFIED:
DIMENSIONS ARE IN INCHES
TOLERANCES
DECIMALS .XX +/- .05 .XXX +/-.010
ANGULAR +/- .5
DO NOT SCALE DRAWING

DRAWN	T. RUTLEDGE	10/17/2007
CHECKED		
QA		
MFG		
APPROVED		

NATIONAL DATA BUOY CENTER
John C. Stennis Space Center
Stennis Space Center, Mississippi,39529

TITLE
AUXILLARY POWER STRAP ASSEMBLY

SIZE B | DWG NO 02.3F01124 | REV

SCALE | SHEET 1 OF 1

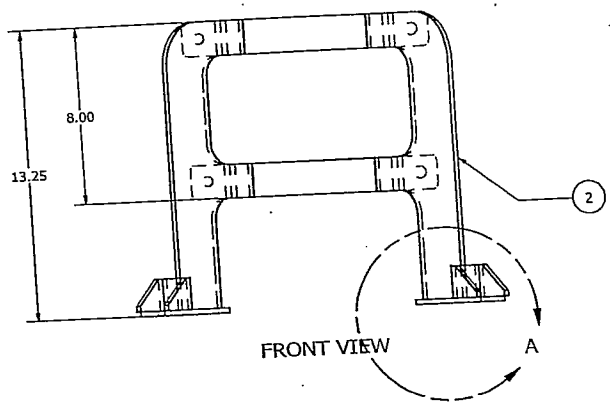

FRONT VIEW

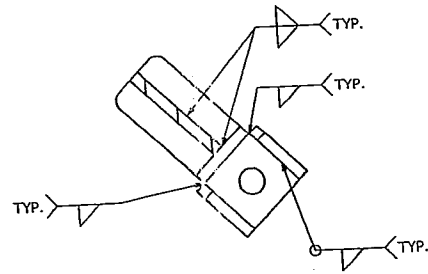

DETAIL A TOP VIEW

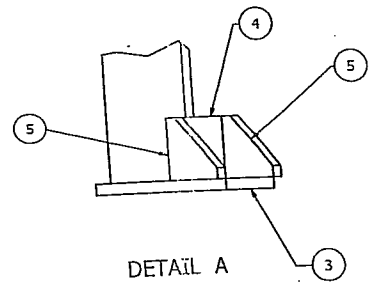

DETAIL A

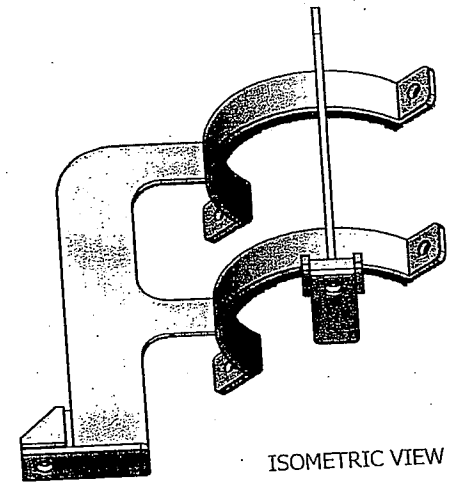

ISOMETRIC VIEW

ADCP BRACKET HALF ASSEMBLY -001

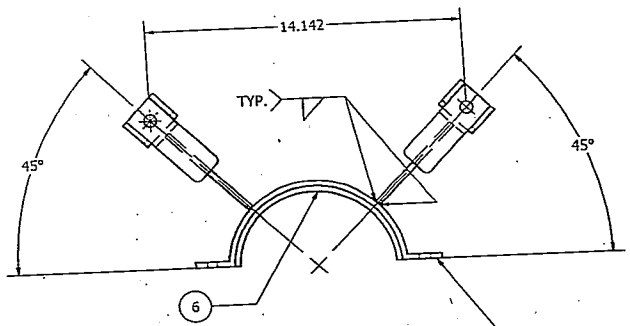

BOTTOM VIEW

ITEM	QTY	PART NUMBER	CONTROL #	DESCRIPTION
6	2	02.3F01147-001		ADCP CLAMP RUBBER
5	4	02.3F01146-001		ADCP BRACKET GUSSET
4	2	02.3F01145-001		ADCP BRACKET PAD BACKING
3	2	02.3F01144-001		ADCP BRACKET PAD
2	2	02.3F01143-001		ADCP BRACKET RISER
1	2	02.3F01142-001		ADCP BRACKET CLAMP

Parts List

UNLESS OTHERWISE SPECIFIED:
DIMENSIONS ARE IN INCHES
TOLERANCES
DECIMALS .XX +/- .05 .XXX +/-.010
ANGULAR +/- .5
DO NOT SCALE DRAWING

DRAWN T. RUTLEDGE	10/17/2007	NATIONAL DATA BUOY CENTER John C. Stennis Space Center Stennis Space Center, Mississippi,39529
CHECKED		TITLE
QA		ADCP BRACKET HALF ASSEMBLY
MFG		
APPROVED		SIZE C / DWG NO 02.3F01123 / REV
		SCALE / SHEET 1 OF 1

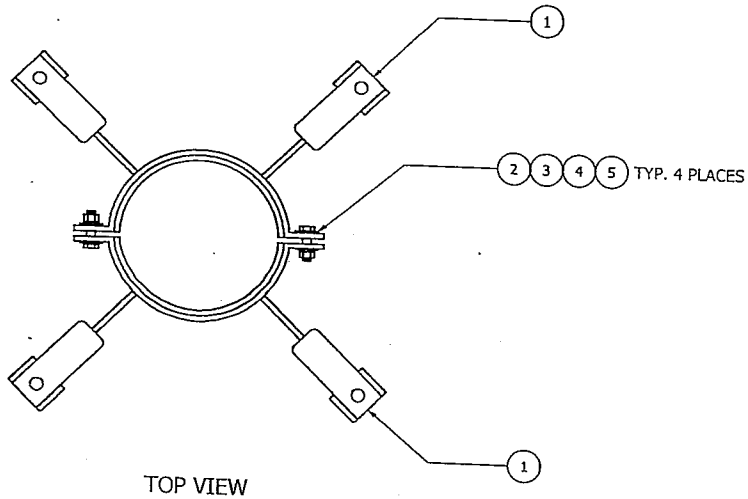

TOP VIEW

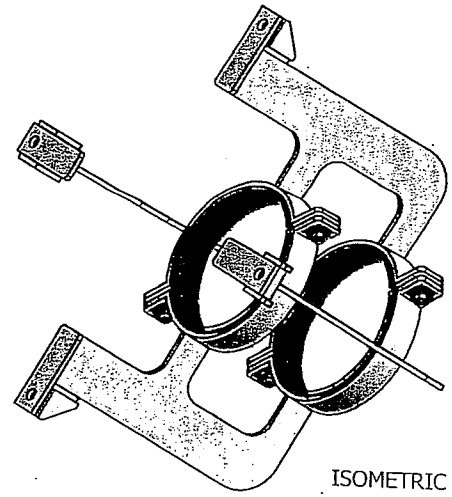

ISOMETRIC VIEW

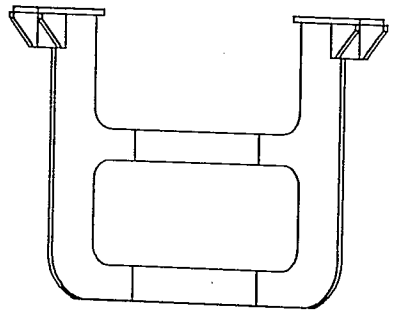

FRONT VIEW

ADCP BRACKET ASSEMBLY -001

Parts List

ITEM	QTY	PART NUMBER	CONTROL #	DESCRIPTION
5	4	-	3414	SCREW, HEX CAP, 316 SST, 0.375-16 UNC X 1.50 (3/8-16 X 1 1/2)
4	4	-	2159	NUT, HEX, 316 SST, 0.375-16 UNC (3/8-16)
3	4	-	723	WASHER, LOCK, 316 SST, 0.375, HELICAL SPRING (3/8 SPRING TYPE)
2	8	-	663	WASHER, FLAT, 316 SST, 0.375 - 0.406 ID 0.813 OD (3/8 REGULAR)
1	2	02.3F01123-001	NSN	ADCP BRACKET HALF ASSYEMBLY

UNLESS OTHERWISE SPECIFIED:
DIMENSIONS ARE IN INCHES
TOLERANCES
DECIMALS .XX +/- .05 .XXX +/-.010
ANGULAR +/- .5
DO NOT SCALE DRAWING

DRAWN	chuckc	10/17/2007
CHECKED		
QA		
MFG		
APPROVED		

NATIONAL DATA BUOY CENTER
John C. Stennis Space Center
Stennis Space Center, Mississippi,39529

TITLE
ADCP BRACKET ASSEMBLY

SIZE C | DWG NO 02.3F01122 | REV

SCALE | SHEET 1 OF 1

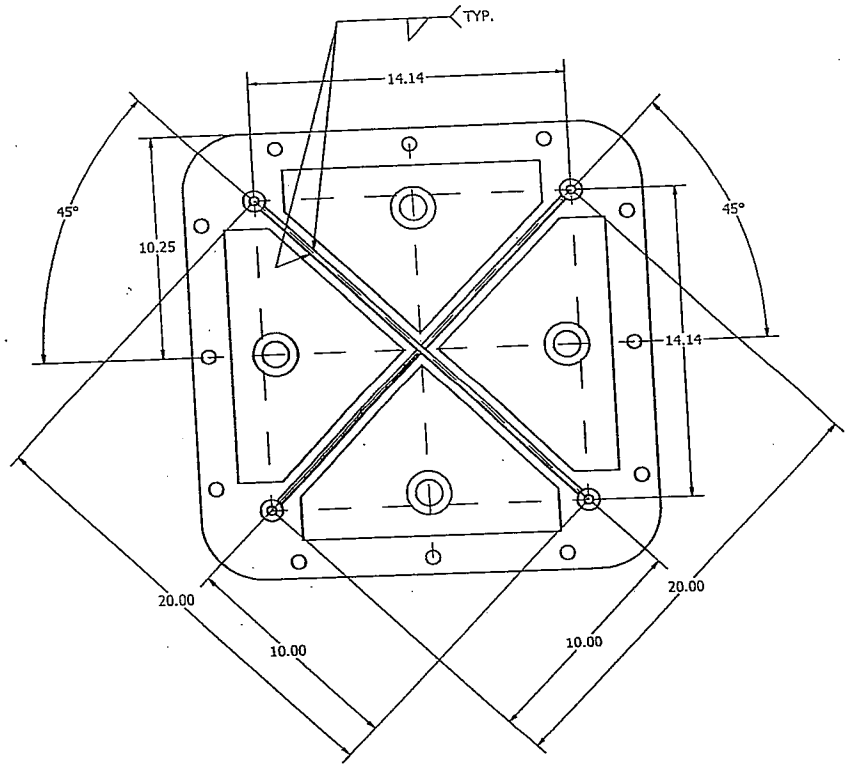

BOTTOM FABRICATION VIEW

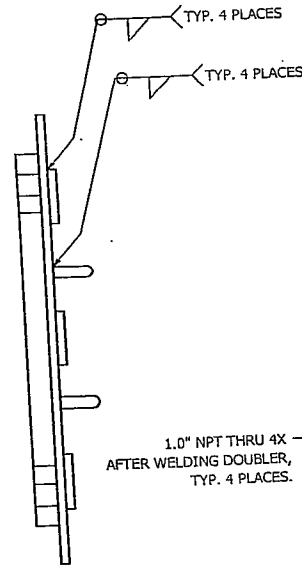

SIDE FABRICATION VIEW

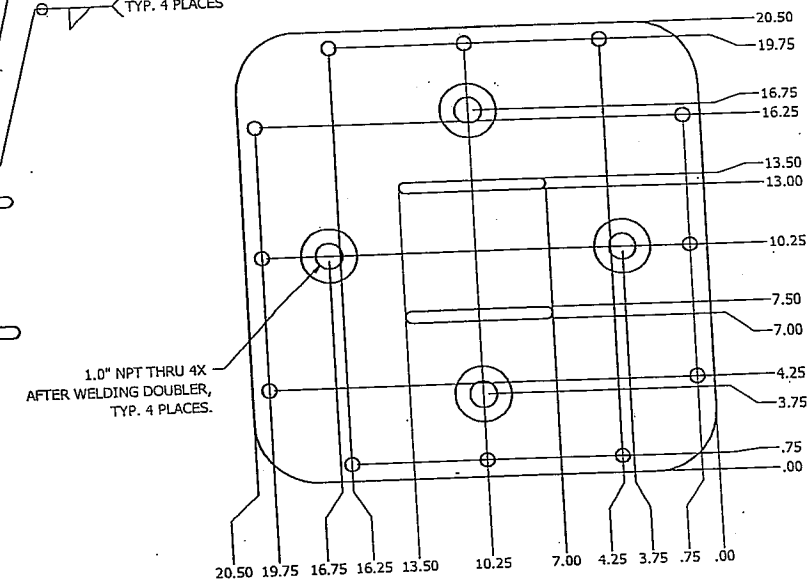

TOP FABRICATION VIEW

UNLESS OTHERWISE SPECIFIED: DIMENSIONS ARE IN INCHES TOLERANCES DECIMALS .XX +/- .05 .XXX +/-.010 ANGULAR +/- .5 DO NOT SCALE DRAWING	DRAWN C.Carpenter	10/17/2007	NATIONAL DATA BUOY CENTER John C. Stennis Space Center Stennis Space Center, Mississippi,39529
	CHECKED		TITLE LOWER WELL LID WELDMENT
	QA		
	MFG		
	APPROVED		SIZE C / DWG NO 02.3F01121 / REV
			SCALE / SHEET 2 OF 2

NOTES:
1. See fabrication views on sheet 2 for part locations.

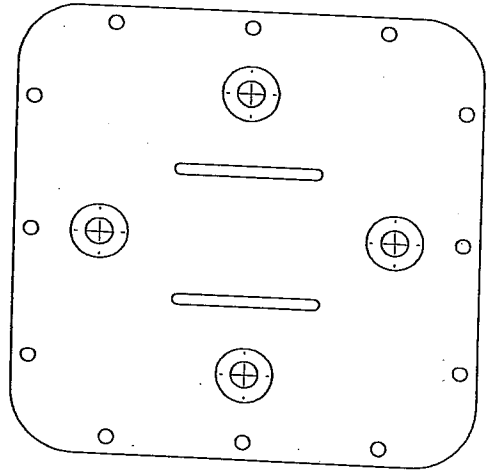

TOP VIEW

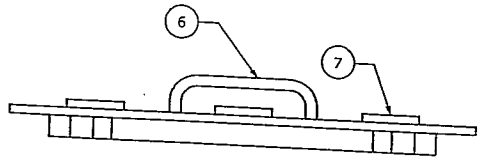

SIDE VIEW

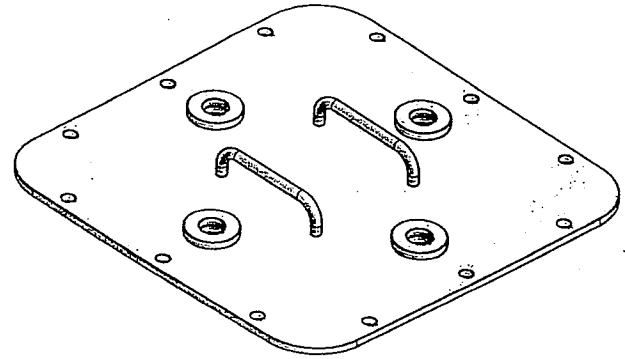

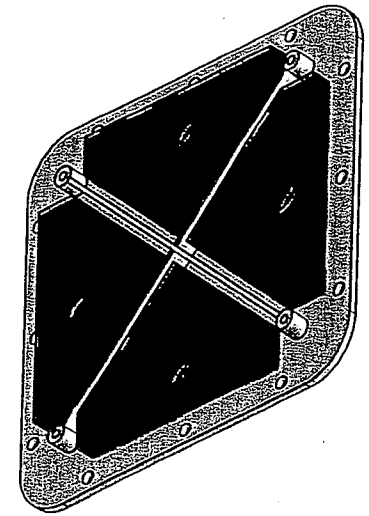

ISOMETRIC VIEWS

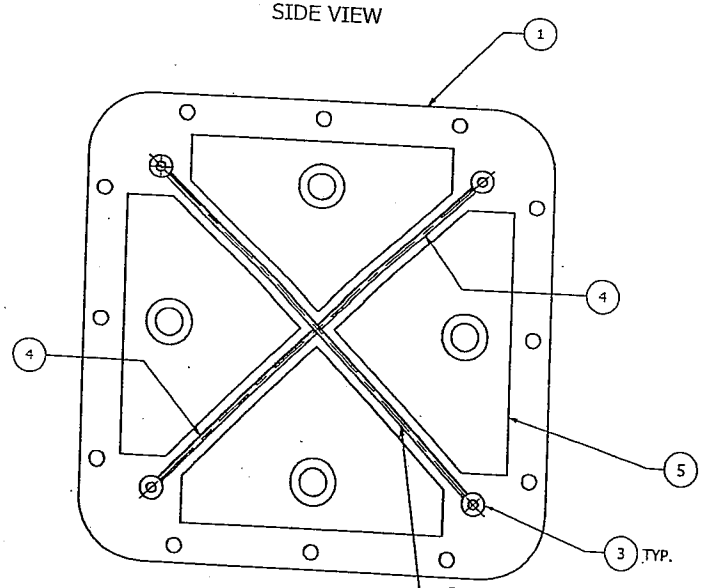

BOTTOM VIEW

LOWER WELL LID WELDMENT -001

ITEM	QTY	PART NUMBER	CONTROL #	DESCRIPTION
7	4	02.3F01134-001	NSN	LOWER WELL BULKHEAD DOUBLER
6	2	02.3F01165-001	NSN	WELL LID HANDLE
5	4	02.3F01139-001	NSN	LOWER WELL LID LINING
4	2	02.3F01136-001	NSN	LOWER WELL LID STIFFENER (9.38)
3	4	02.3F01135-001	NSN	LOWER WELL THREADED DOWEL
2	1	02.3F01136-002	NSN	LOWER WELL LID STIFFENER (19.00)
1	1	02.3F01133-001	NSN	LOWER WELL LID PLATE

Parts List

UNLESS OTHERWISE SPECIFIED:
DIMENSIONS ARE IN INCHES
TOLERANCES
DECIMALS .XX +/- .05 .XXX +/-.010
ANGULAR +/- .5
DO NOT SCALE DRAWING

DRAWN	C.Carpenter	10/17/2007
CHECKED		
QA		
MFG		
APPROVED		

NATIONAL DATA BUOY CENTER
John C. Stennis Space Center
Stennis Space Center, Mississippi,39529

TITLE
LOWER WELL LID WELDMENT

SIZE C | DWG NO 02.3F01121 | REV

SCALE | SHEET 1 OF 2

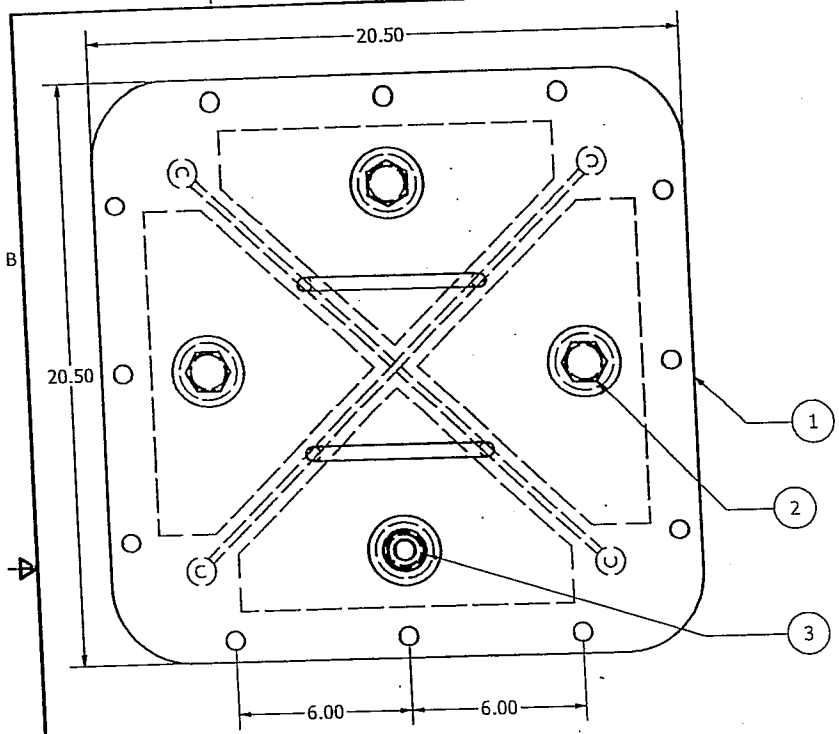

TOP VIEW

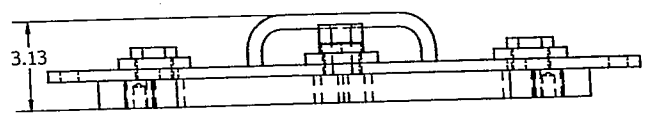

SIDE VIEW

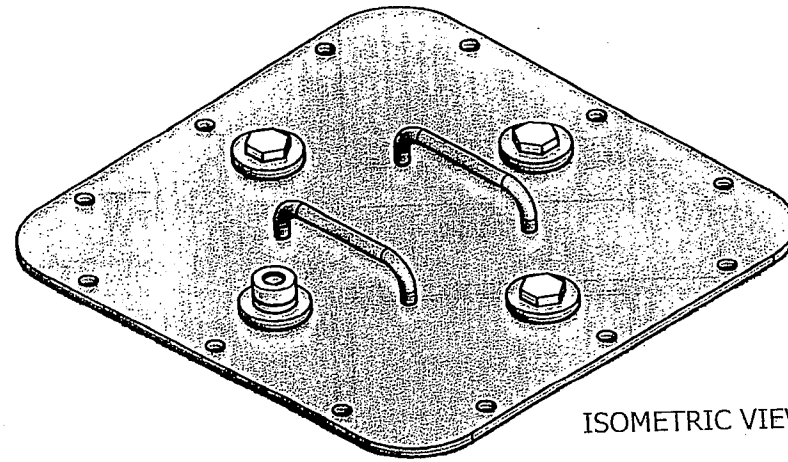

ISOMETRIC VIEW

LOWER WELL LID ASSEMBLY -001

ITEM	QTY	PART NUMBER	CONTROL #	DESCRIPTION
3	1	-	265	CONNECTOR, NYLON CORD GRIP 1.0 NPT FOR 0.375 - 0.500 CORD
2	3	-	3237	PLUG, 1.0 NPT, 316 SST, SQUARE HEAD
1	1	02.3F01121-001	NSN	LOWER WELL LID WELDMENT

Parts List

UNLESS OTHERWISE SPECIFIED:
DIMENSIONS ARE IN INCHES
TOLERANCES
DECIMALS .XX +/- .05 .XXX +/-.010
ANGULAR +/- .5
DO NOT SCALE DRAWING

DRAWN	T. RUTLEDGE	10/18/2007
CHECKED		
QA		
MFG		
APPROVED		

NATIONAL DATA BUOY CENTER
John C. Stennis Space Center
Stennis Space Center, Mississippi,39529

TITLE
LOWER WELL LID ASSEMBLY

SIZE	DWG NO	REV
B	02.3F01120	

SCALE | SHEET 1 OF 1

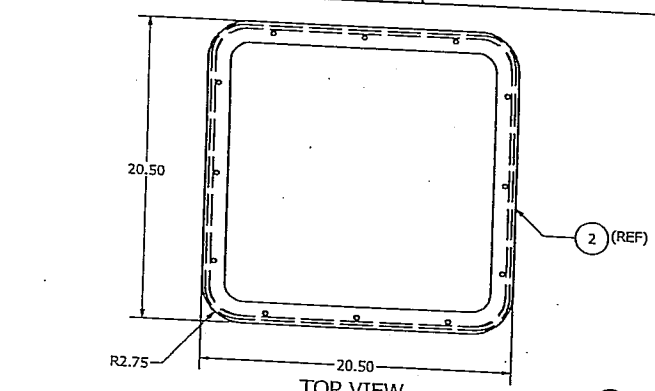

TOP VIEW

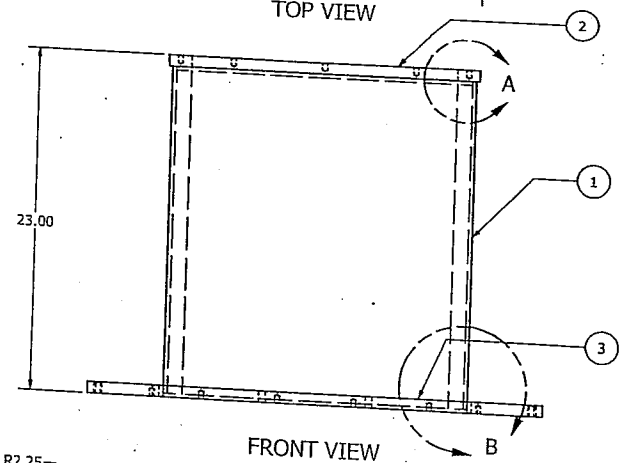

FRONT VIEW

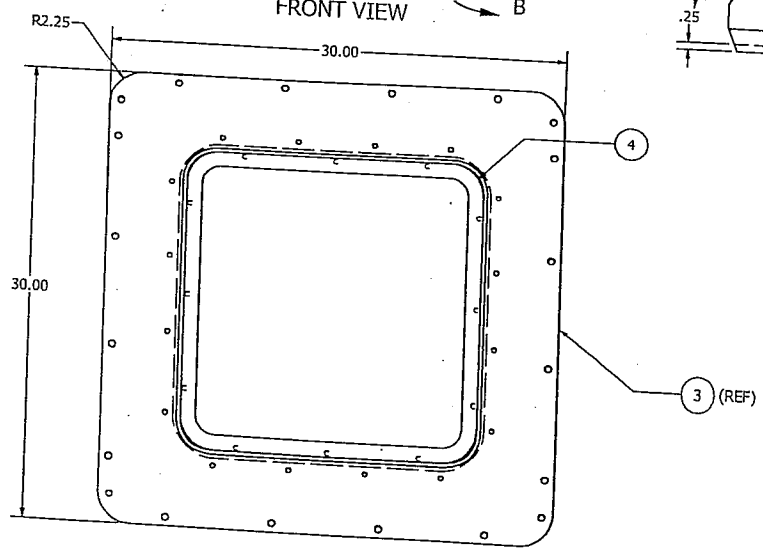

BOTTOM VIEW

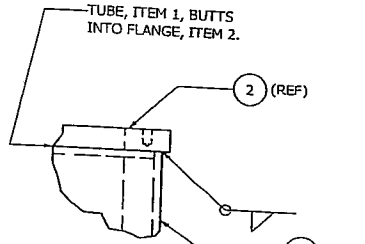

DETAIL A

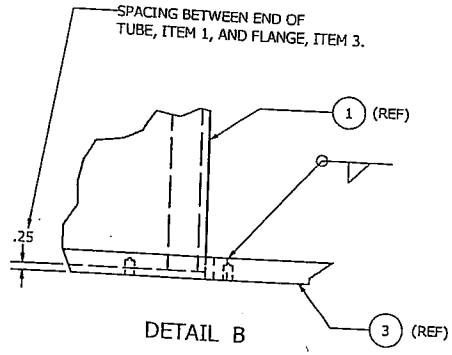

DETAIL B

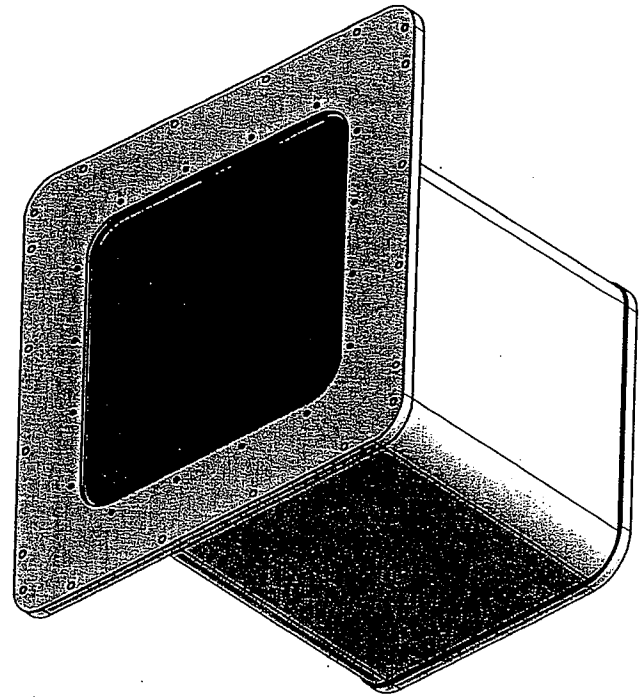

ISOMETRIC VIEW

LOWER WELL WELDMENT -001

ITEM	QTY	PART NUMBER	CONTROL #	DESCRIPTION
4	1	02.3F01138-001	NSN	LOWER WELL LINNING
3	1	02.3F01132-001	NSN	LOWER WELL BOTTOM FLANGE
2	1	02.3F01131-001	NSN	LOWER WELL TOP FLANGE
1	1	02.3F01130-001	NSN	LOWER WELL TUBE

Parts List

UNLESS OTHERWISE SPECIFIED:
DIMENSIONS ARE IN INCHES
TOLERANCES
DECIMALS .XX +/- .05 .XXX +/-.010
ANGULAR +/- .5
DO NOT SCALE DRAWING

DRAWN	T. RUTLEDGE	10/18/2007
CHECKED		
QA		
MFG		
APPROVED		

NATIONAL DATA BUOY CENTER
John C. Stennis Space Center
Stennis Space Center, Mississippi,39529

TITLE: LOWER WELL WELDMENT

SIZE: C | DWG NO: 02.3F01119 | REV

SCALE | SHEET 1 OF 1

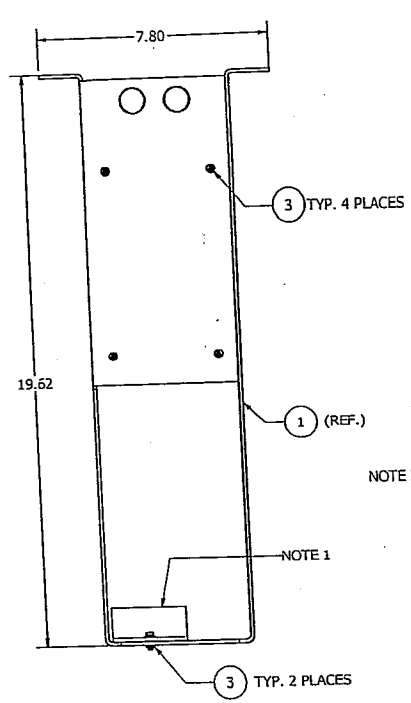

BACK VIEW

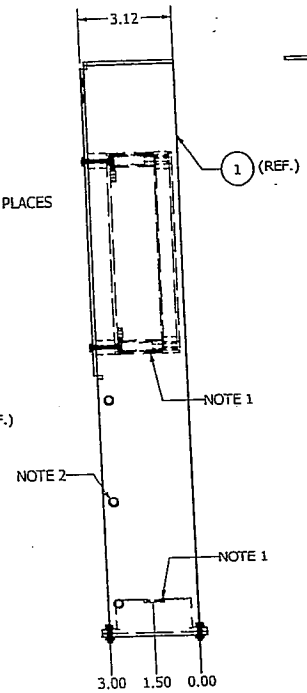

SIDE VIEW

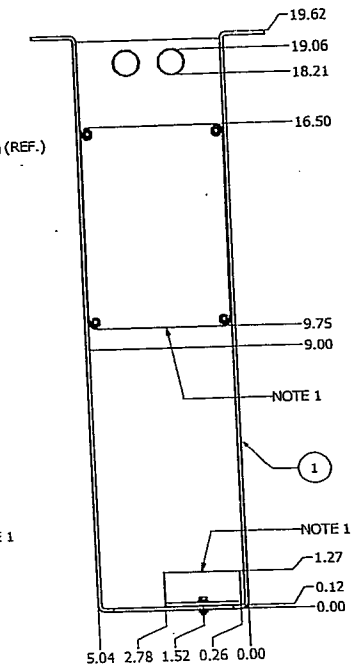

FRONT VIEW

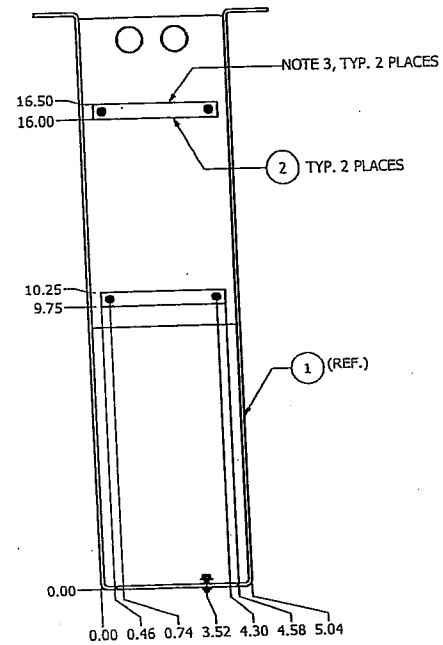

FRONT VIEW W/O SENSORS

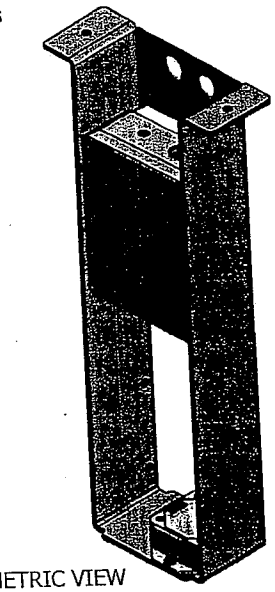

ISOMETRIC VIEW

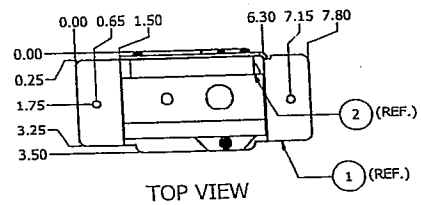

TOP VIEW

WAVES BRACKET WELDMENT -001

NOTES:
1. Sensors shown for positional reference only. See 5000 series drawings for itemization of sensors and their associated hardware.
2. Use holes in bracket, item 1, to secure sensor cable with tywraps.
3. Apply adhesive, item 4, to secure mount, item 2, to bracket, item 1.

ITEM	QTY	PART NUMBER	CONTROL #	DESCRIPTION
4	AR	3M 1357	3268	ADHESIVE, CONTACT, SOLVENT CEMENT
3	6	PENN MANUFACTURING CLS-632-2	6983	NUT, SELF-CLINCHING, 316 SST, #6-32UNF
2	2	02.3F01185-001	NSN	WAVES ELECTRONICS MOUNT
1	1	02.3F01184-001	NSN	WAVES BRACKET

Parts List

UNLESS OTHERWISE SPECIFIED:
DIMENSIONS ARE IN INCHES
TOLERANCES
DECIMALS .XX +/- .05 .XXX +/-.010
ANGULAR +/- .5
DO NOT SCALE DRAWING

DRAWN	chuckc	10/4/2007
CHECKED		
QA		
MFG		
APPROVED		

NATIONAL DATA BUOY CENTER
John C. Stennis Space Center
Stennis Space Center, Mississippi,39529

TITLE
WAVES BRACKET WELDMENT

SIZE	DWG NO	REV
C	02.3F01118	

SCALE | SHEET 1 OF 1

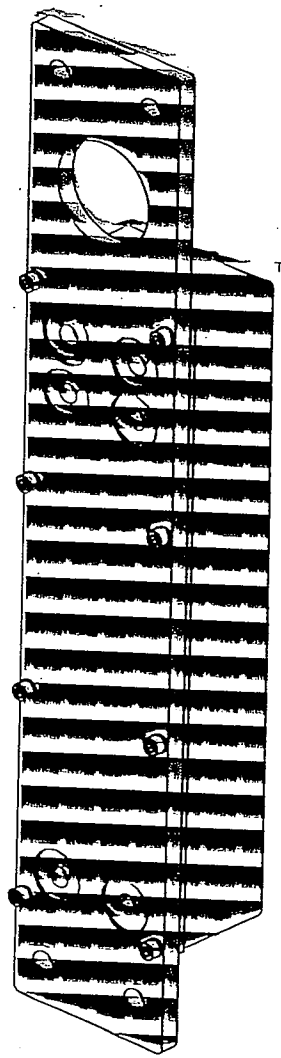

ISOMETRIC VIEW

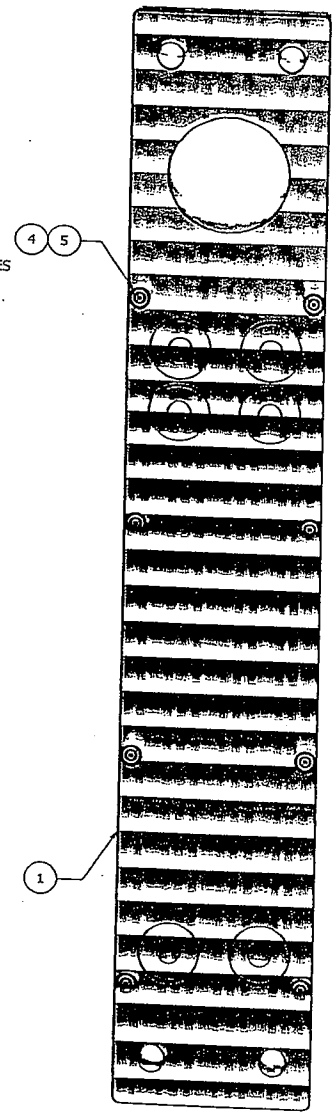

FRONT VIEW

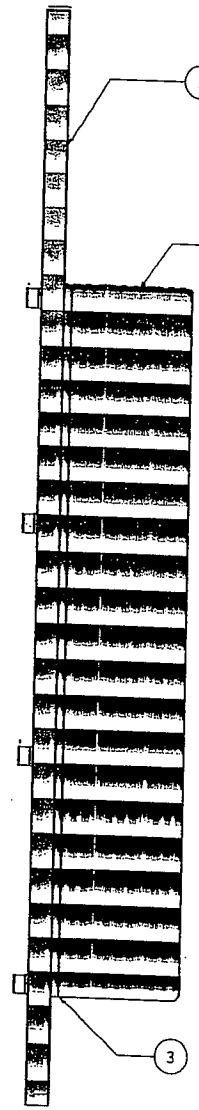

SIDE VIEW

POWER RAIL ENCLOSURE ASSEMBLY -001

ITEM	QTY	PART NUMBER	CONTROL #	DESCRIPTION
5	8	McMASTER-CARR 92146A011	2186	WASHER, LOCK, HELICAL SPRING, 18-8 SST, #10
4	8	McMASTER-CARR 91857A247	5400	SCREW, MACHINE, ROUND HEAD SLOT, 316 SST, #10-24 X 1.0
3	1	02.3F01183-001	NSN	POWER RAIL GASKET
2	1	02.3F01182-001	NSN	POWER RAIL COVER
1	1	02.3F01181-001	NSN	POWER RAIL BASE

Parts List

UNLESS OTHERWISE SPECIFIED:
DIMENSIONS ARE IN INCHES
TOLERANCES
DECIMALS .XX +/- .05 .XXX +/-.010
ANGULAR +/- .5
DO NOT SCALE DRAWING

DRAWN	chuckc	10/29/2007
CHECKED		
QA		
MFG		
APPROVED		

NATIONAL DATA BUOY CENTER
John C. Stennis Space Center
Stennis Space Center, Mississippi,39529

TITLE: POWER RAIL ENCLOSURE ASSEMBLY

SIZE: C | DWG NO: 02.3F01117 | REV

SCALE | SHEET 1 OF 1

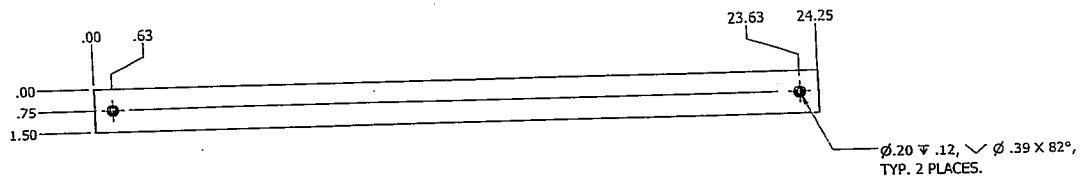

TOP VIEW

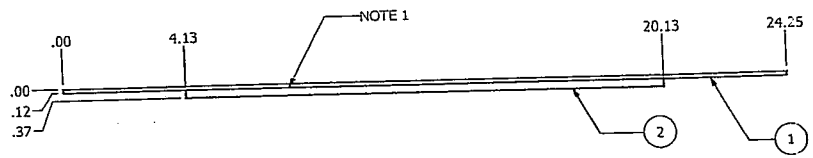

SIDE VIEW

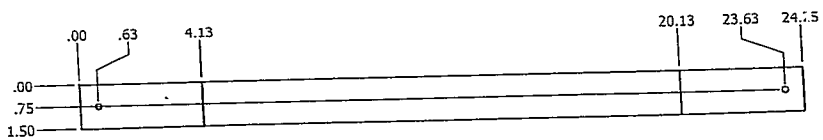

BOTTOM VIEW

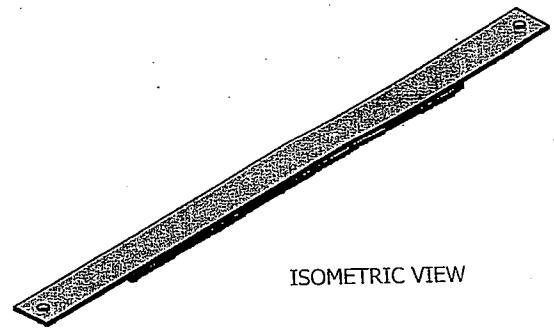

ISOMETRIC VIEW

BATTERY STRAP -002
LOWER

NOTES:
1. Apply adhesive, item 3, to secure gasket, item 2, to plate, item 1.

ITEM	QTY	PART NUMBER	CONTROL #	DESCRIPTION
3	AR	3M 1357	3268	ADHESIVE, CONTACT, SOLVENT CEMENT
2	1	-	2115	GASKET, NEOPRENE, 60 DURO, 0.25 X 16.0 X 1.50
1	1	-	7349	PLATE, METAL, 316 SST, 0.125 X 24.25 X 1.50 (1/8")

Parts List

UNLESS OTHERWISE SPECIFIED:
DIMENSIONS ARE IN INCHES
TOLERANCES
DECIMALS .XX +/- .05 .XXX +/-.010
ANGULAR +/- .5
DO NOT SCALE DRAWING

DRAWN	chuckc	10/29/2007
CHECKED		
QA		
MFG		
APPROVED		

NATIONAL DATA BUOY CENTER
John C. Stennis Space Center
Stennis Space Center, Mississippi,39529

TITLE
BATTERY STRAP

SIZE	DWG NO	REV
C	02.3F01116	

SCALE

SHEET 2 OF 2

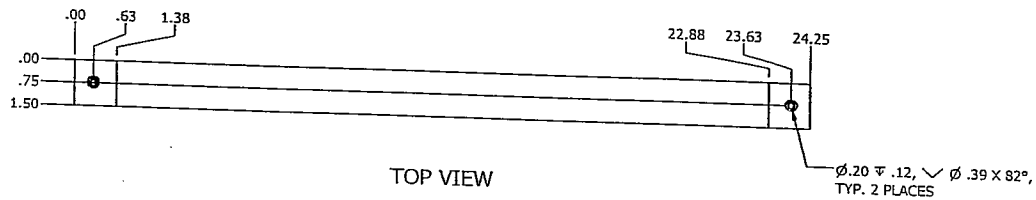

TOP VIEW

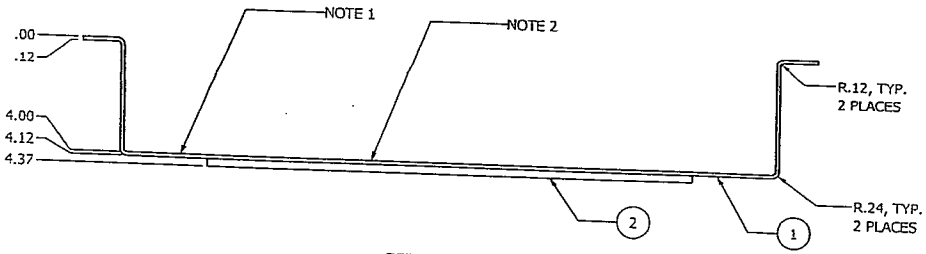

SIDE VIEW

BOTTOM VIEW

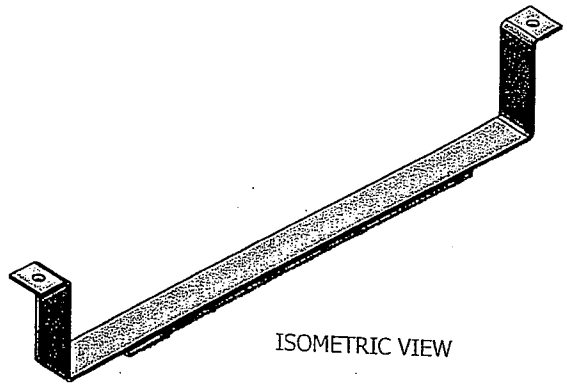

ISOMETRIC VIEW

BATTERY STRAP -001
UPPER

NOTES:
1. Length before bending will be 31.15".
2. Apply adhesive, item 3, to secure gasket, item 2, to plate, item 1.

ITEM	QTY	PART NUMBER	CONTROL #	DESCRIPTION
3	AR	3M 1357	3268	ADHESIVE, CONTACT, SOLVENT CEMENT
2	1	-	2115	GASKET, NEOPRENE, 60 DURO, 0.25 X 16.0 X 1.50
1	1	-	7349	PLATE, METAL, 316 SST., 0.125 X 31.15 X 1.50 (1/8")

Parts List

UNLESS OTHERWISE SPECIFIED:
DIMENSIONS ARE IN INCHES
TOLERANCES
DECIMALS .XX +/- .05 .XXX +/-.010
ANGULAR +/- .5
DO NOT SCALE DRAWING

DRAWN chuckc 10/29/2007
CHECKED
QA
MFG
APPROVED

NATIONAL DATA BUOY CENTER
John C. Stennis Space Center
Stennis Space Center, Mississippi,39529

TITLE
BATTERY STRAP

SIZE C
DWG NO 02.3F01116
REV
SCALE
SHEET 1 OF 2

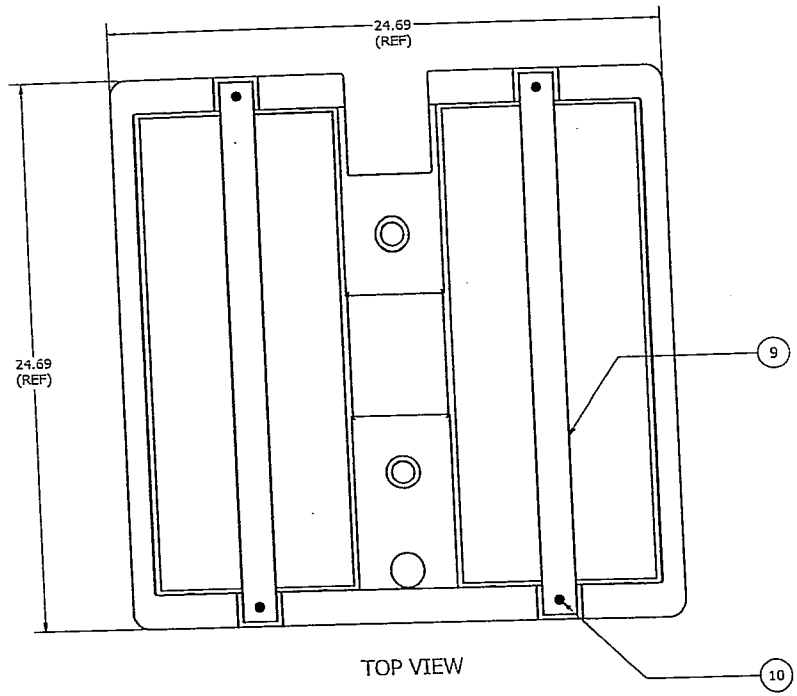

TOP VIEW

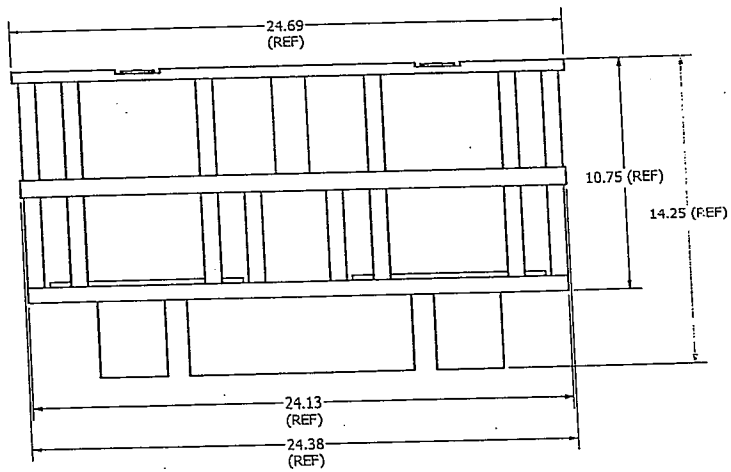

END VIEW

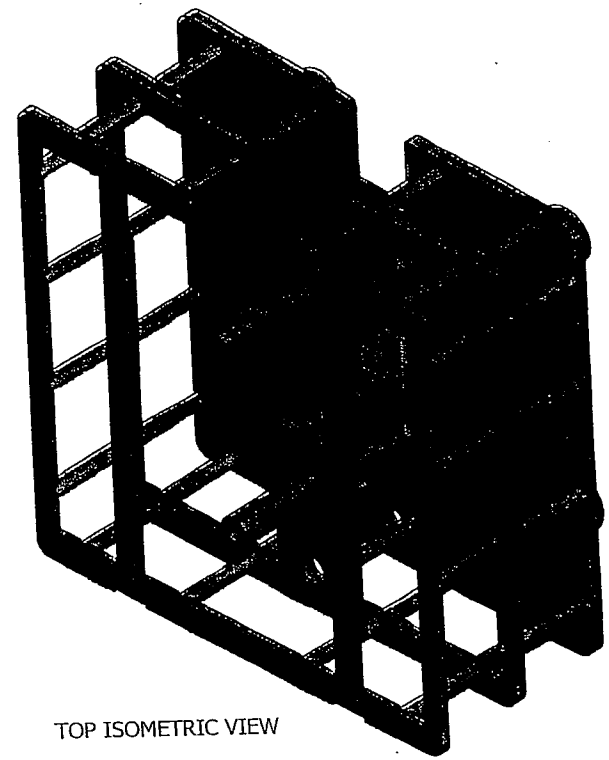

TOP ISOMETRIC VIEW

LOWER BATTERY RACK ASSEMBLY -001

UNLESS OTHERWISE SPECIFIED: DIMENSIONS ARE IN INCHES TOLERANCES DECIMALS .XX +/- .05 .XXX +/-.010 ANGULAR +/- .5 DO NOT SCALE DRAWING	DRAWN chuckc	10/29/2007	NATIONAL DATA BUOY CENTER John C. Stennis Space Center Stennis Space Center, Mississippi,39529
	CHECKED		TITLE LOWER BATTERY RACK ASSEMBLY
	QA		
	MFG		
	APPROVED		SIZE C / DWG NO 02.3F01115 / REV
			SCALE / SHEET 2 OF 2

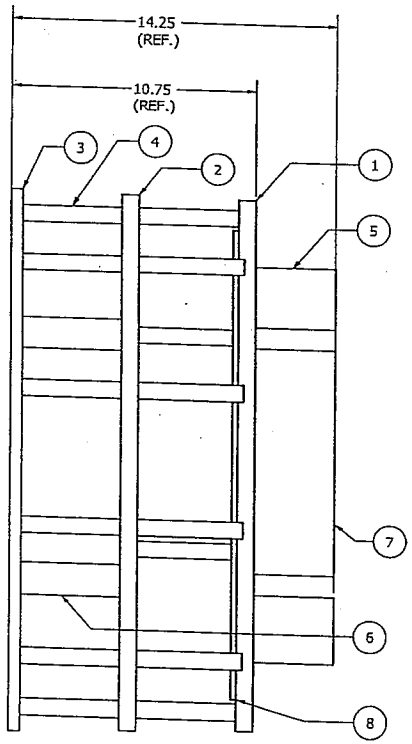

SIDE VIEW

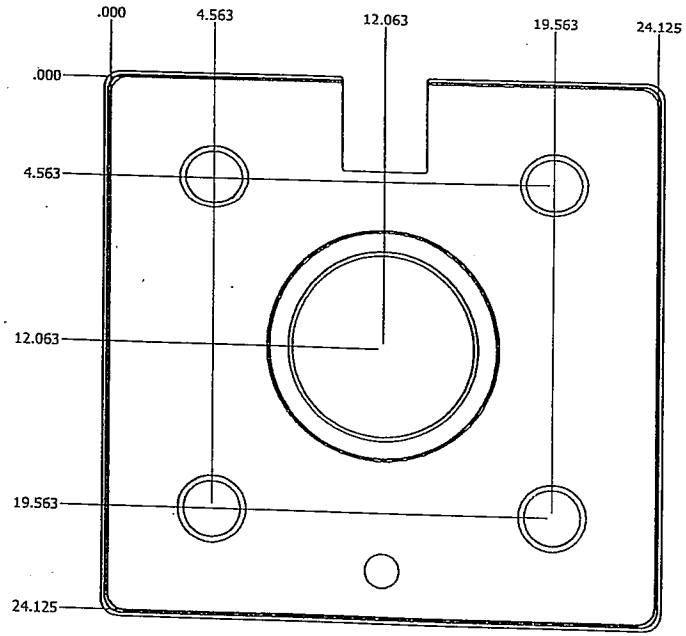

BOTTOM VIEW

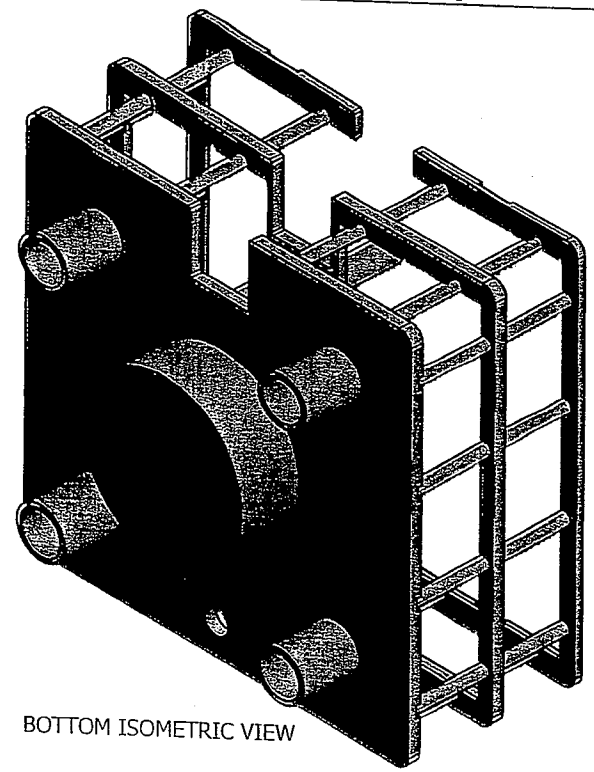

BOTTOM ISOMETRIC VIEW

LOWER BATTERY RACK ASSEMBLY -001

NOTES:
1. Apply epoxy adhesive, item 10, to assembly parts, items 1-6, to secure them in place.
2. Apply contact adhesive, item 11, to hold mat, item 7, onto base plate, item 1.

ITEM	QTY	PART NUMBER	CONTROL #	DESCRIPTION
13	AR	3M 1357	3268	ADHESIVE, CONTACT, SOLVENT CEMENT
11	AR	McMASTER CARR 74575A77	1702	ADHESIVE, EPOXY, 2 PART METAL FILLED ALUMINUM, 6.5 OZ TUBE, DEVCON # 19770
10	4	McMASTER CARR 91500A827	13367	SCREW, CROSS, #10-32UNF X 0.375, 316SST, FLAT HD, (#10-32 x 3/8)
9	2	02.3F01116-002	NSN	BATTERY STRAP (LOWER)
8	2	02.3F01171-001	NSN	BATTERY MATT
7	1	02.3F01178-001	NSN	BATTERY RACK WELL
6	2	02.3F01177-002	NSN	BATTERY RACK STAND OFF (5.125)
5	4	02.3F01177-001	NSN	BATTERY RACK STANDOFF (4.50)
4	38	02.3F01175-001	NSN	BATTERY RACK DOWELL(4.88)
3	1	02.3F01174-002	NSN	BATTERY RACK SQUEEZE PLATE (LOWER)
2	1	02.3F01173-002	NSN	BATTERY RACK KEEPER PLATE (LOWER)
1	1	02.3F01172-002	NSN	BATTERY RACK BASE PLATE (LOWER)

Parts List

UNLESS OTHERWISE SPECIFIED:
DIMENSIONS ARE IN INCHES
TOLERANCES
DECIMALS .XX +/- .05 .XXX +/-.010
ANGULAR +/- .5
DO NOT SCALE DRAWING

DRAWN	chuckc	10/29/2007
CHECKED		
QA		
MFG		
APPROVED		

NATIONAL DATA BUOY CENTER
John C. Stennis Space Center
Stennis Space Center, Mississippi,39529

TITLE
LOWER BATTERY RACK ASSEMBLY

SIZE C | DWG NO 02.3F01115 | REV

SCALE | SHEET 1 OF 7

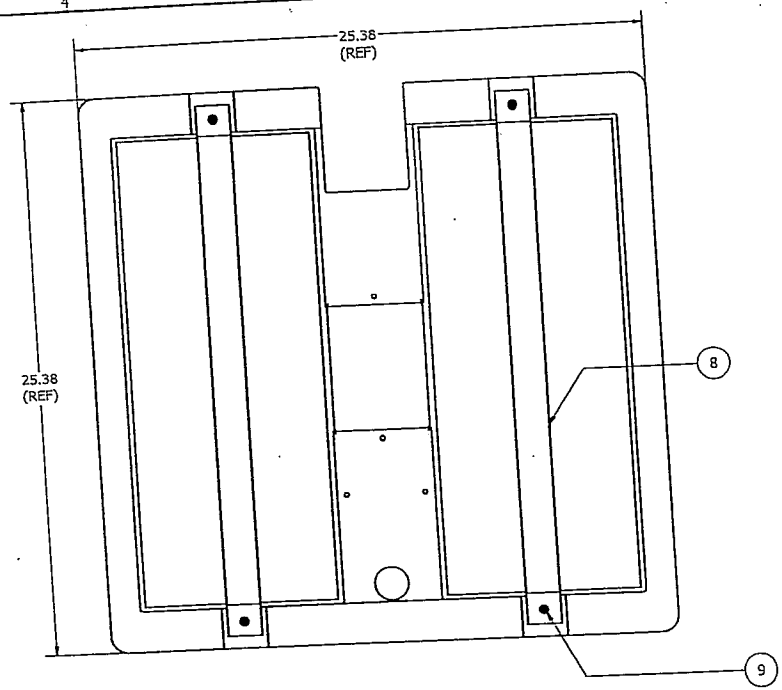

TOP VIEW

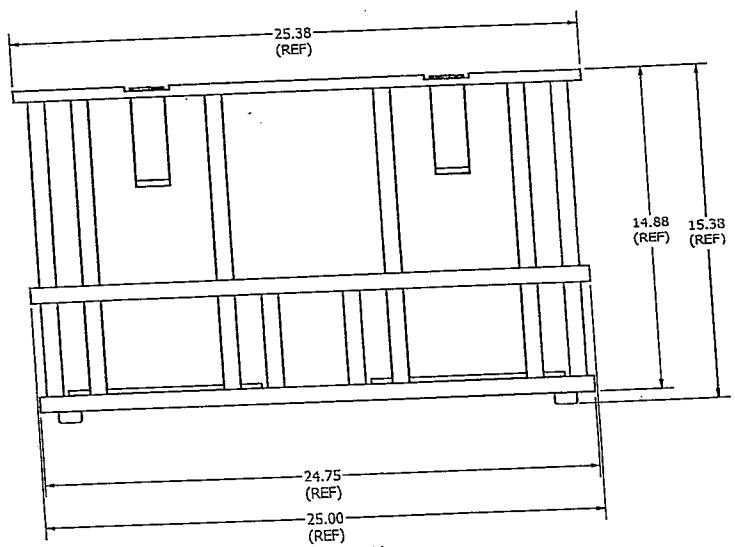

END VIEW

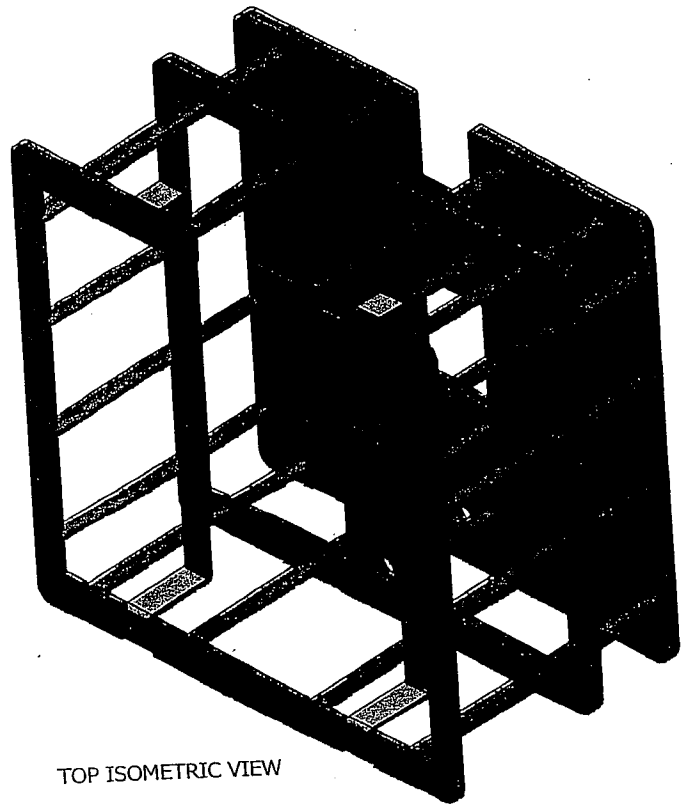

TOP ISOMETRIC VIEW

UPPER BATTERY RACK ASSEMBLY -001

UNLESS OTHERWISE SPECIFIED: DIMENSIONS ARE IN INCHES TOLERANCES DECIMALS .XX +/- .05 .XXX +/-.010 ANGULAR +/- .5 DO NOT SCALE DRAWING	DRAWN chuckc	10/29/2007	NATIONAL DATA BUOY CENTER John C. Stennis Space Center Stennis Space Center, Mississippi,39529
	CHECKED		TITLE UPPER BATTERY RACK ASSEMBLY
	QA		
	MFG		
	APPROVED		SIZE C / DWG NO 02.3F01114 / REV
			SCALE / SHEET 2 OF 2

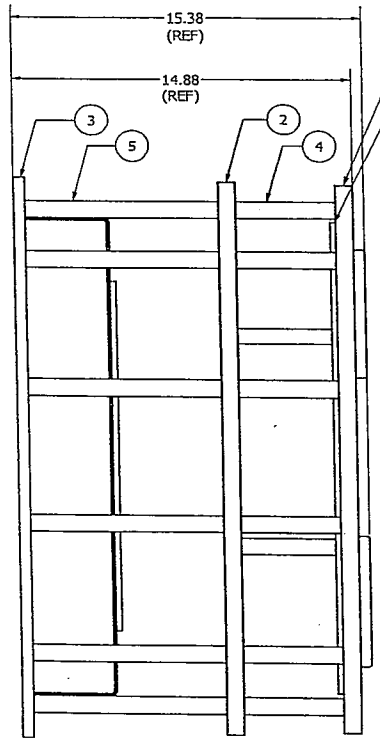

SIDE VIEW

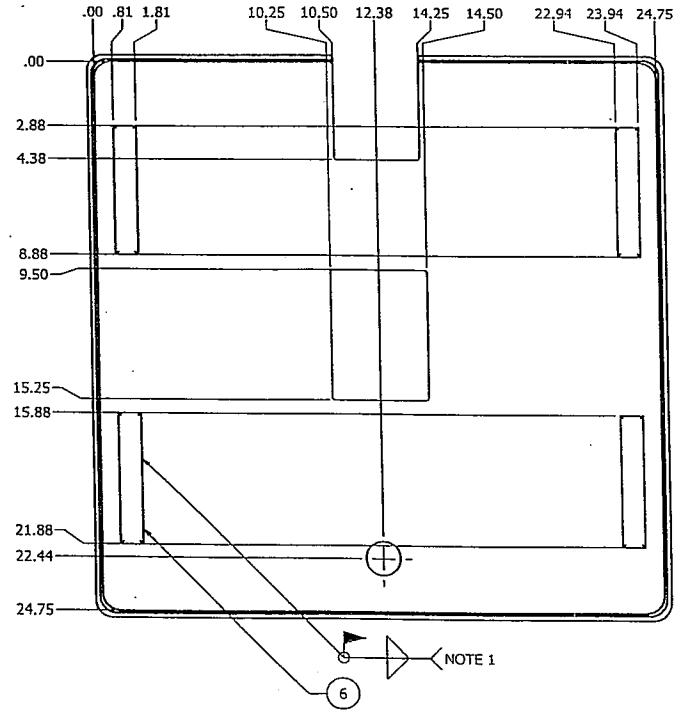

BOTTOM VIEW

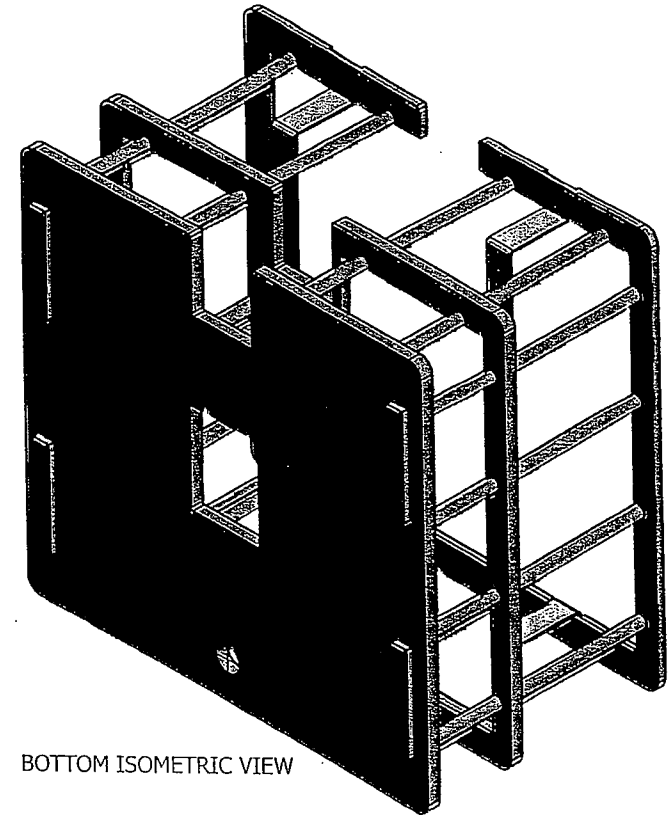

BOTTOM ISOMETRIC VIEW

UPPER BATTERY RACK ASSEMBLY -001

NOTES:
1. Apply epoxy adhesive, item 10, to assembly parts, items 1-6, to secure them in place.
2. Apply contact adhesive, item 11, to hold mat, item 7, onto base plate, item 1.

ITEM	QTY	PART NUMBER	CONTROL #	DESCRIPTION
11	AR	3M 1357	3268	ADHESIVE, CONTACT, SOLVENT CEMENT
10	AR	McMASTER CARR 74575A77	1702	ADHESIVE, EPOXY, 2 PART METAL FILLED ALUMINUM, 6.5 OZ TUBE, DEVCON # 19770
9	4	McMASTER CARR 91500A827	13367	SCREW, CROSS, #10-32UNF X 0.375, 316SST, FLAT HD, (#10-32 x 3/8)
8	2	02.3F01116-001	NSN	BATTERY STRAP (UPPER)
7	2	02.3F01171-001	NSN	BATTERY MAT
6	4	02.3F01176-001	NSN	BATTERY RACK LIP PLATE
5	16	02.3F01175-002	NSN	BATTERY RACK DOWEL (9.00)
4	22	02.3F01175-001	NSN	BATTERY RACK DOWEL (4.88)
3	1	02.3F01174-001	NSN	BATTERY RACK SQUEEZE PLATE (UPPER)
2	1	02.3F01173-001	NSN	BATTERY RACK KEEPER PLATE (UPPER)
1	1	02.3F01172-001	NSN	BATTERY RACK BASE PLATE (UPPER)

Parts List

UNLESS OTHERWISE SPECIFIED:
DIMENSIONS ARE IN INCHES
TOLERANCES
DECIMALS .XX +/- .05 .XXX +/-.010
ANGULAR +/- .5
DO NOT SCALE DRAWING

DRAWN	chuckc	10/29/2007
CHECKED		
QA		
MFG		
APPROVED		

NATIONAL DATA BUOY CENTER
John C. Stennis Space Center
Stennis Space Center, Mississippi,39529

TITLE
UPPER BATTERY RACK ASSEMBLY

SIZE	DWG NO	REV
C	02.3F01114	

SCALE

SHEET 1 OF 2

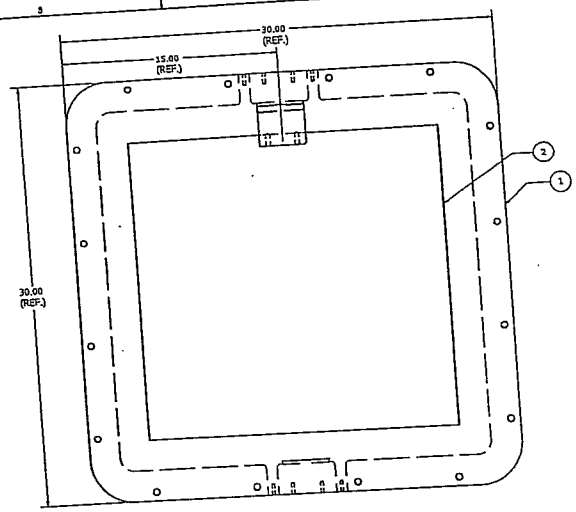

TOP VIEW

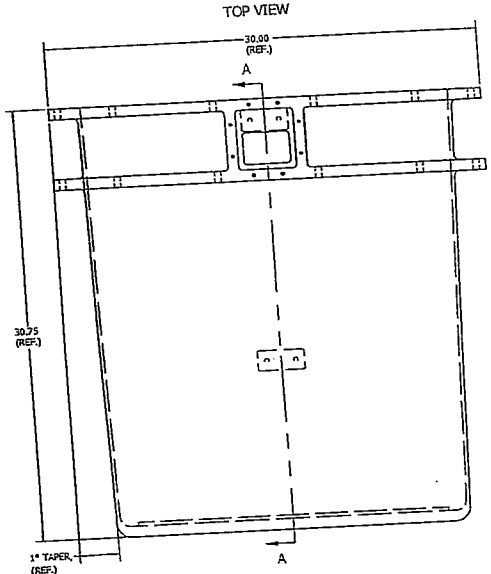

FRONT VIEW

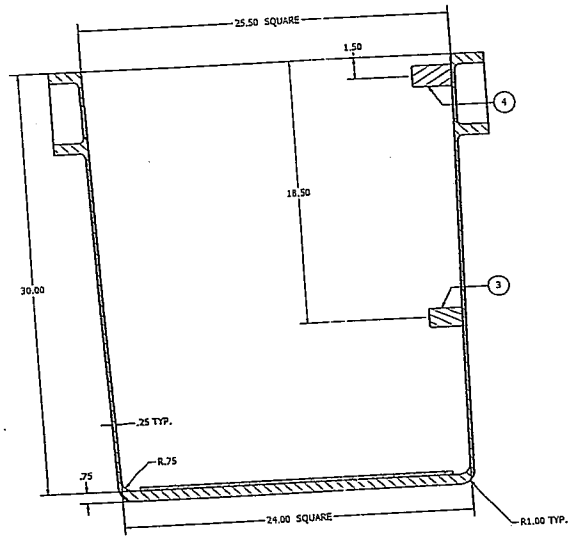

SECTION A-A

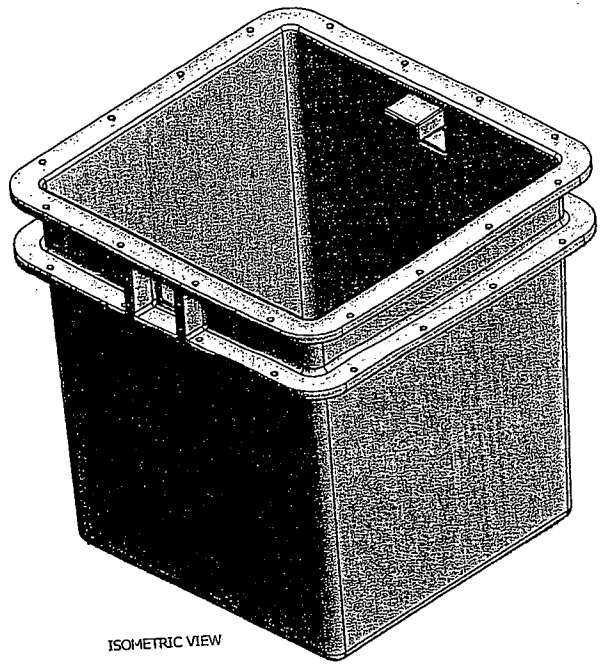

ISOMETRIC VIEW

UPPER WELL SHELL ASSEMBLY -001

ITEM	QTY	PART NUMBER	CONTROL #	DESCRIPTION
4	1	02.3F01169-002	NSN	RAIL MOUNT (TOP)
3	1	02.3F01169-001	NSN	RAIL MOUNT (BOTTOM)
2	1	02.3F01170-001	NSN	UPPER WELL MATT
1	1	02.3F01168-001	NSN	UPPER EQUIPMENT WELL SHELL

Parts List

UNLESS OTHERWISE SPECIFIED, DIMENSIONS ARE IN INCHES
TOLERANCES:
DECIMALS .XX +/-.05 .XXX +/-.010
ANGULAR +/-.5
DO NOT SCALE DRAWING

DRAWN	chucks	10/29/2007
CHECKED	T. Rudedge	11/21/2007
QA		
MFG		
APPROVED		

NATIONAL DATA BUOY CENTER
John C. Stennis Space Center
Stennis Space Center, Mississippi 39529

TITLE: UPPER WELL SHELL ASSEMBLY

SIZE: D | DWG NO: 02.3F01113 | REV

SCALE | SHEET 1 OF 1

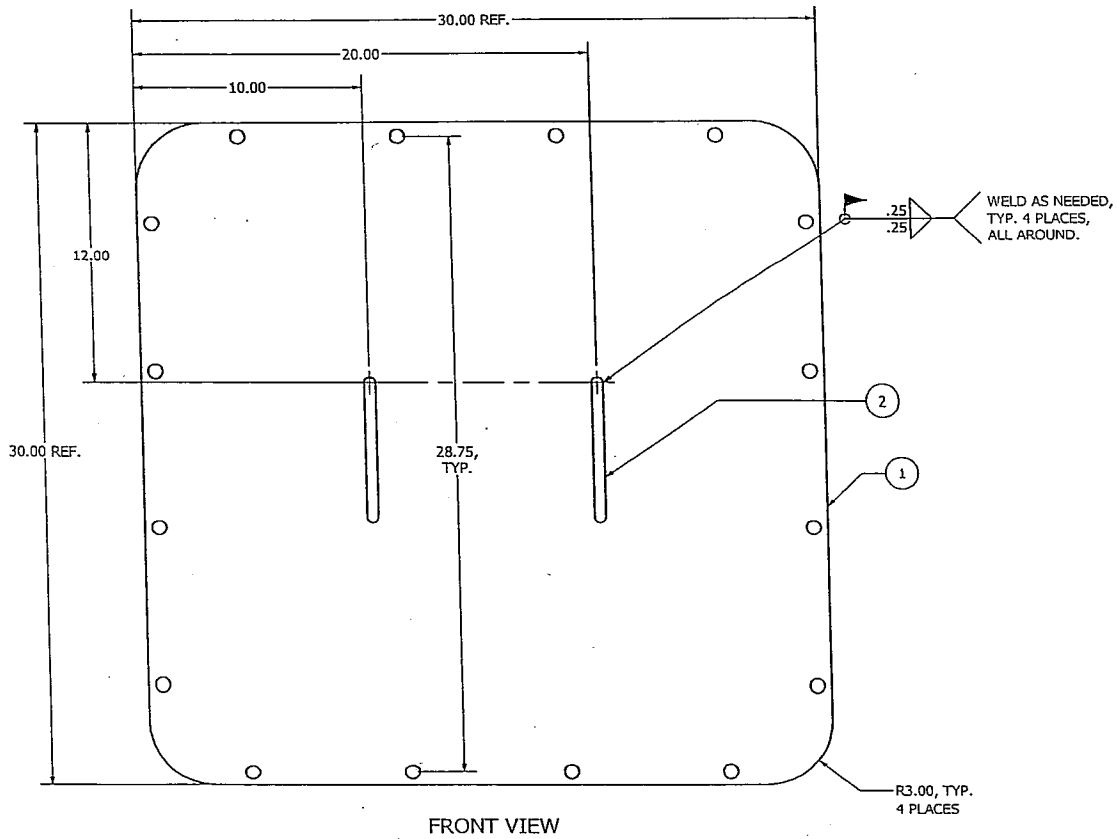

FRONT VIEW

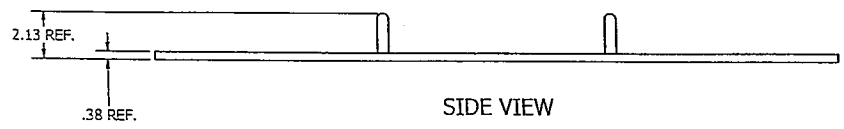

SIDE VIEW

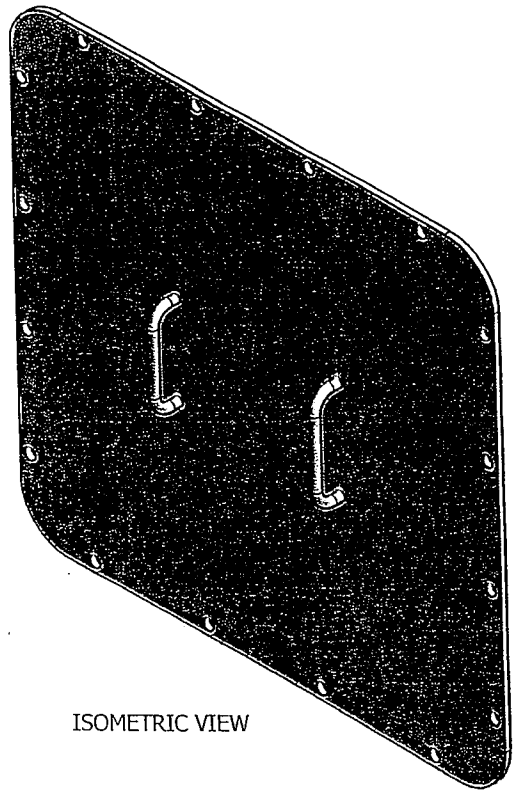

ISOMETRIC VIEW

UPPER WELL LID -001

ITEM	QTY	PART NUMBER	CONTROL #	DESCRIPTION
2	2	02.3F01165-001	NSN	WELL LID HANDLE (6.50)
1	1	02.3F01164-001	NSN	UPPER WELL LID PLATE

Parts List

UNLESS OTHERWISE SPECIFIED:
DIMENSIONS ARE IN INCHES
TOLERANCES
DECIMALS .XX +/- .05 .XXX +/-.010
ANGULAR +/- .5
DO NOT SCALE DRAWING

DRAWN T. RUTLEDGE 10/5/2007
CHECKED
QA
MFG
APPROVED

NATIONAL DATA BUOY CENTER
John C. Stennis Space Center
Stennis Space Center, Mississippi,39529

TITLE
UPPER WELL LID

SIZE C
DWG NO 02.3F01112
REV
SCALE
SHEET 1 OF 1

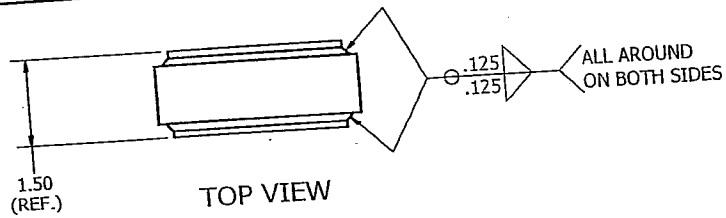

TOP VIEW

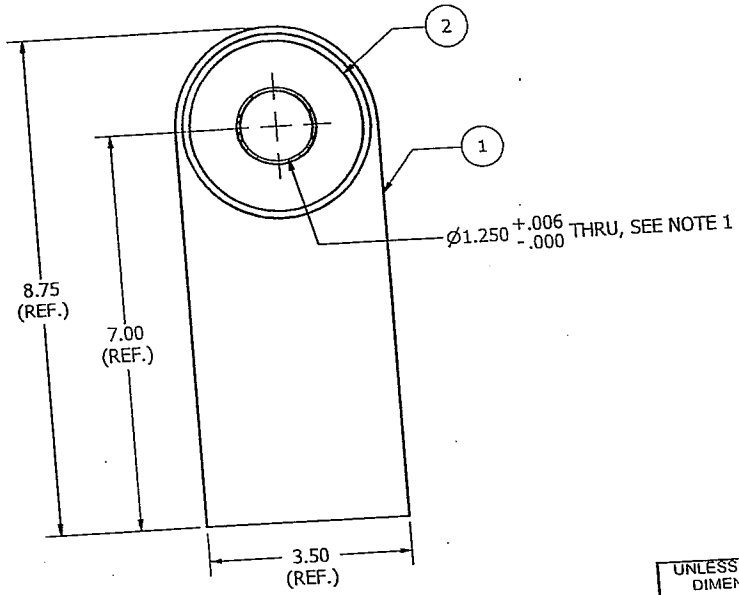

FRONT VIEW

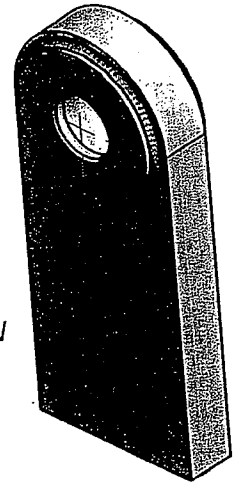

ISOMETRIC VIEW

LOWER PADEYE WELDMENT -001

NOTES:
1. DRILL THRU HOLE IN WELDMENT AFTER WELDING DOUBLERS, ITEM 2, TO BOTH SIDES OF PADEYE, ITEM 1.

Parts List

ITEM	QTY	PART NUMBER	CONTROL #	DESCRIPTION
2	2	02.3F01155-002	NSN	FRAME PADEYE DOUBLER (LOWER)
1	1	02.3F01154-002	NSN	FRAME PADEYE (LOWER)

UNLESS OTHERWISE SPECIFIED:
DIMENSIONS ARE IN INCHES
TOLERANCES
DECIMALS .XX +/- .05 .XXX +/-.010
ANGULAR +/- .5
DO NOT SCALE DRAWING

DRAWN	chuckc	10/22/2007
CHECKED		
QA		
MFG		
APPROVED		

NATIONAL DATA BUOY CENTER
John C. Stennis Space Center
Stennis Space Center, Mississippi,39529

TITLE
LOWER PADEYE WELDMENT

SIZE B | DWG NO 02.3F01111 | REV

SCALE | SHEET 1 OF 1

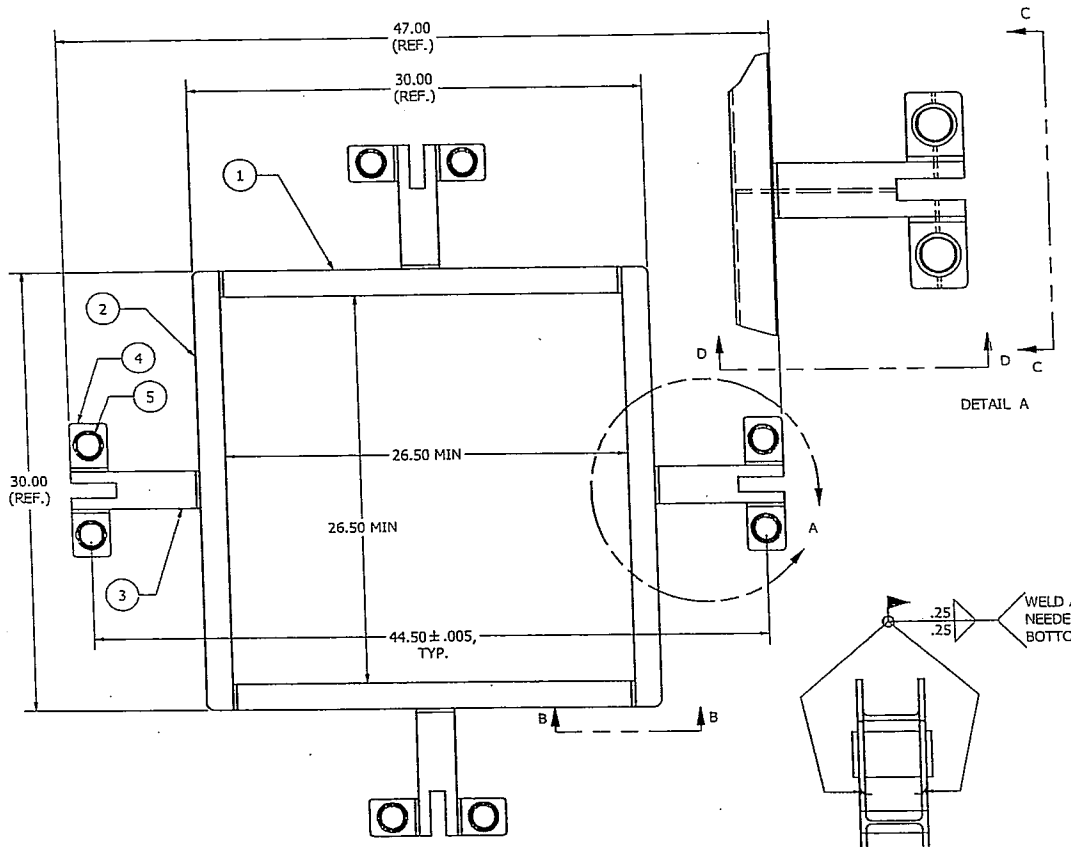

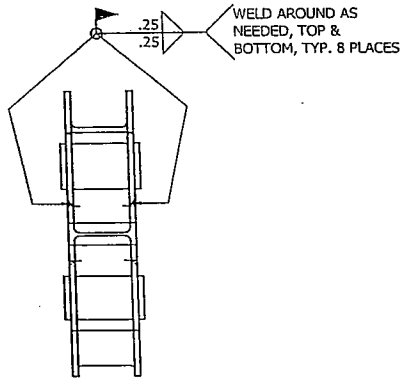

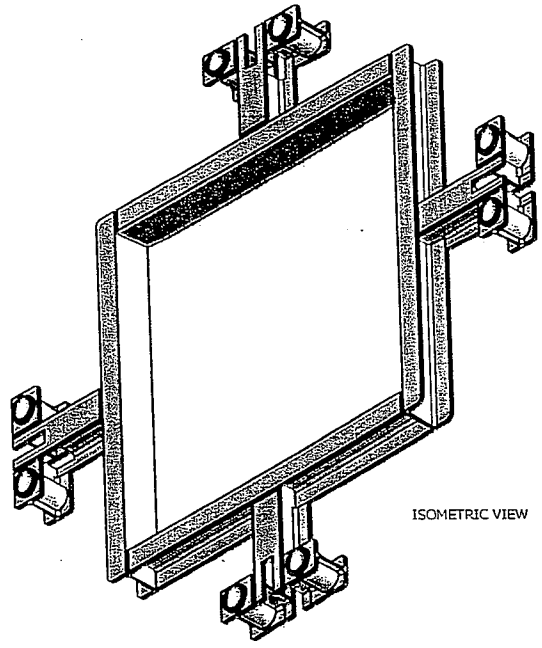

LOWER WELL MOUNT -001

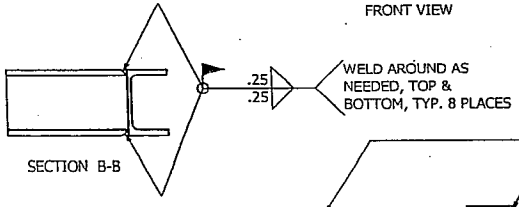

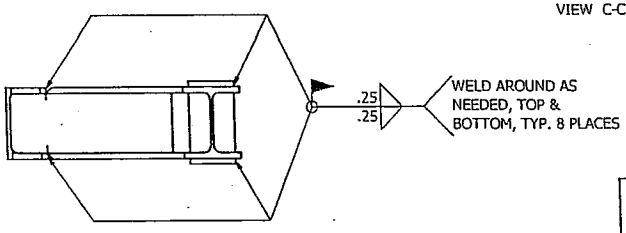

ITEM	QTY	PART NUMBER	CONTROL #	DESCRIPTION
5	8	02.3F01152-001	NSN	FRAME THRU BOLT SLEEVE
4	8	02.3F01161-001	NSN	THRU BOLT HOLDER I-BEAM
3	4	02.3F01160-001	NSN	PADEYE HOLDER I-BEAM
2	2	02.3F01158-002	NSN	FRAME U-CHANNEL (30.0)
1	2	02.3F01158-001	NSN	FRAME U-CHANNEL (26.50)

Parts List

UNLESS OTHERWISE SPECIFIED:
DIMENSIONS ARE IN INCHES
TOLERANCES
DECIMALS .XX +/- .05 .XXX +/-.010
ANGULAR +/- .5
DO NOT SCALE DRAWING

DRAWN	T. RUTLEDGE	10/18/2007
CHECKED		
QA		
MFG		
APPROVED		

NATIONAL DATA BUOY CENTER
John C. Stennis Space Center
Stennis Space Center, Mississippi,39529

TITLE
LOWER WELL MOUNT

SIZE C | DWG NO 02.3F01110 | REV

SCALE | SHEET 1 OF 1

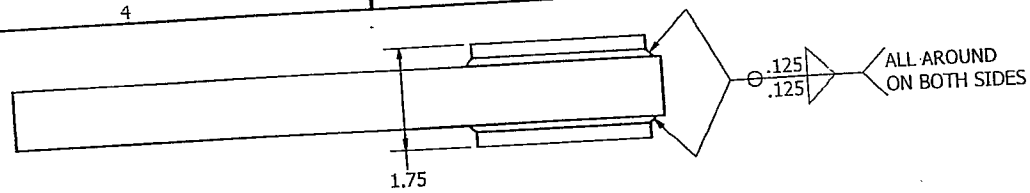

TOP VIEW

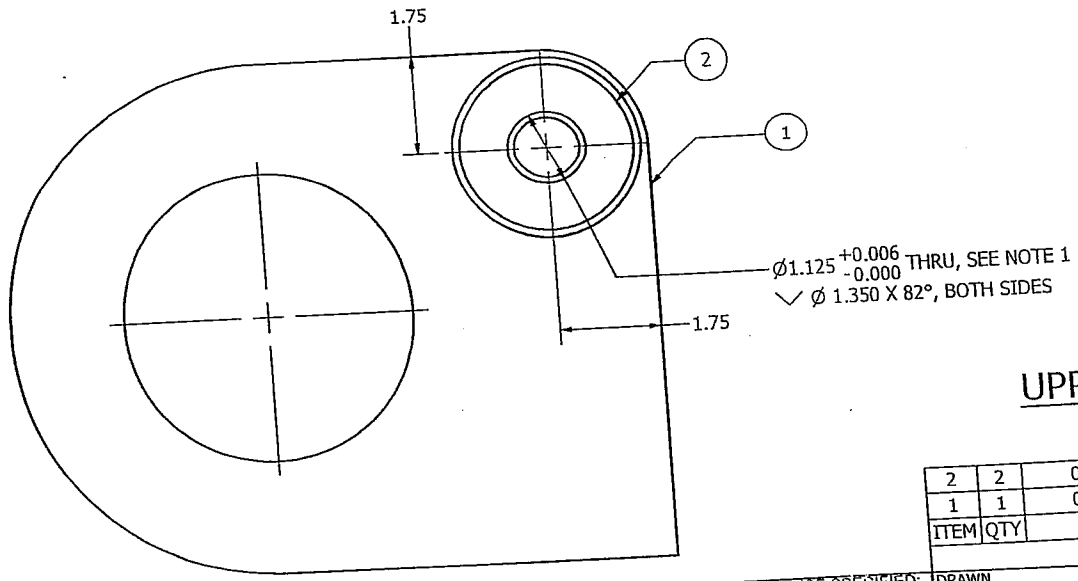

FRONT VIEW

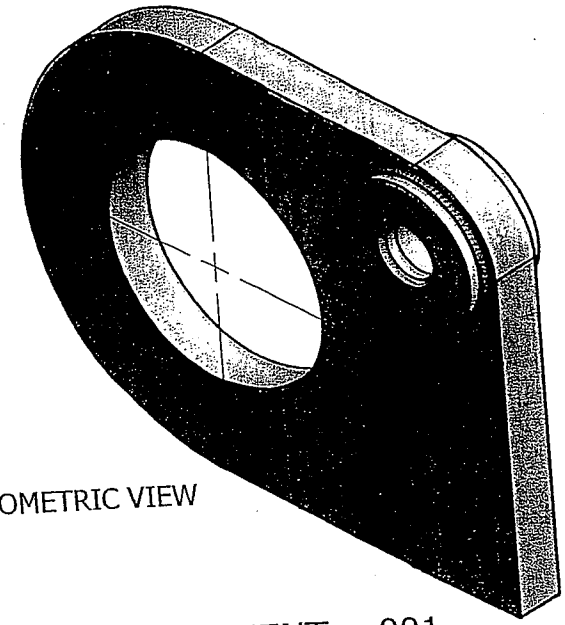

ISOMETRIC VIEW

UPPER PADEYE WELDMENT -001

NOTES:
1. DRILL THRU HOLE IN WELDMENT AFTER WELDING DOUBLERS, ITEM 2, TO BOTH SIDES OF PADEYE, ITEM 1.

ITEM	QTY	PART NUMBER	CONTROL #	DESCRIPTION
2	2	02.3F01155-001	NSN	FRAME PADEYE DOUBLER (UPPER)
1	1	02.3F01154-001	NSN	FRAME PADEYE (UPPER)

Parts List

UNLESS OTHERWISE SPECIFIED:
DIMENSIONS ARE IN INCHES
TOLERANCES
DECIMALS .XX +/- .05 .XXX +/-.010
ANGULAR -/- .5
DO NOT SCALE DRAWING

DRAWN	chuckc	10/5/2007
CHECKED		
QA		
MFG		
APPROVED		

NATIONAL DATA BUOY CENTER
John C. Stennis Space Center
Stennis Space Center, Mississippi,39529

TITLE
UPPER PADEYE WELDMENT

SIZE	DWG NO	REV
B	02.3F01109	

SCALE 1 SHEET 1 OF 1

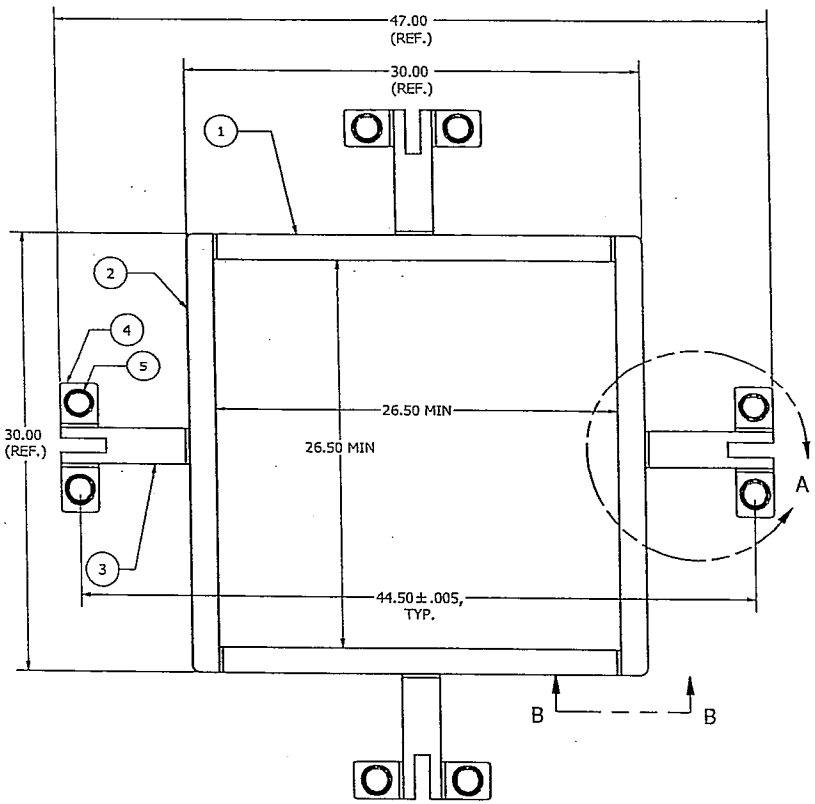

FRONT VIEW

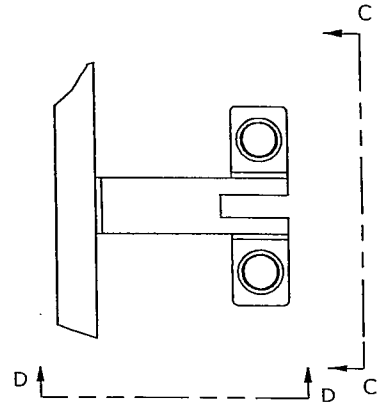

DETAIL A

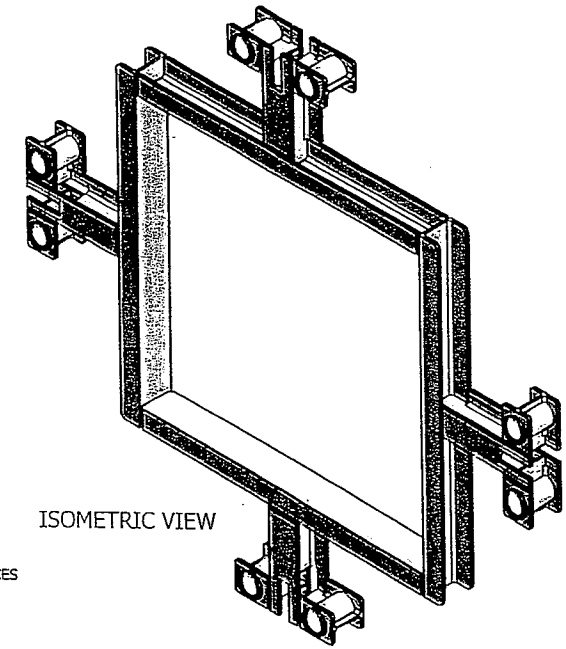

ISOMETRIC VIEW

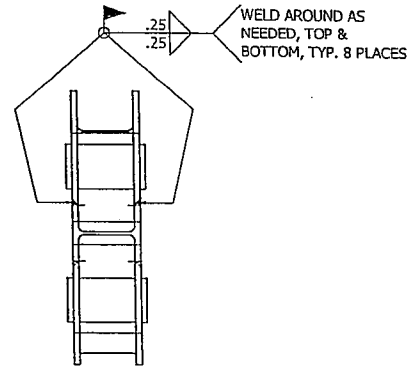

VIEW C-C

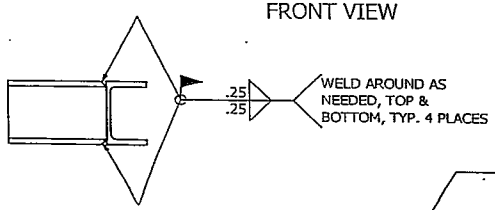

SECTION B-B

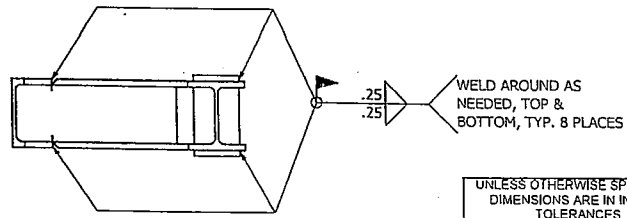

VIEW D-D

UPPER WELL MOUNT -001

ITEM	QTY	PART NUMBER	CONTROL #	DESCRIPTION
5	8	02.3F01152-001	NSN	FRAME THRU BOLT SLEEVE
4	8	02.3F01161-001	NSN	THRU BOLT HOLDER I-BEAM
3	4	02.3F01160-001	NSN	PADEYE HOLDER I-BEAM
2	2	02.3F01158-002	NSN	FRAME U-CHANNEL (30.0)
1	2	02.3F01158-001	NSN	FRAME U-CHANNEL (26.50)

Parts List

UNLESS OTHERWISE SPECIFIED:
DIMENSIONS ARE IN INCHES
TOLERANCES
DECIMALS .XX +/- .05 .XXX +/-.010
ANGULAR +/- .5
DO NOT SCALE DRAWING

DRAWN	chuckc	10/26/2007
CHECKED		
QA		
MFG		
APPROVED		

NATIONAL DATA BUOY CENTER
John C. Stennis Space Center
Stennis Space Center, Mississippi,39529

TITLE
UPPER WELL MOUNT

SIZE	DWG NO	REV
C	02.3F01108	

SCALE

SHEET 1 OF 1

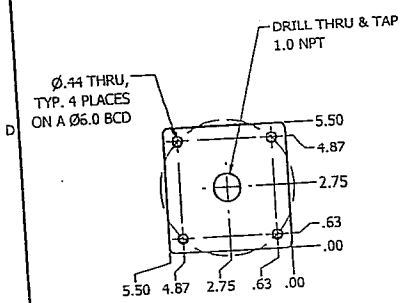

TOP FABRICATION VIEW

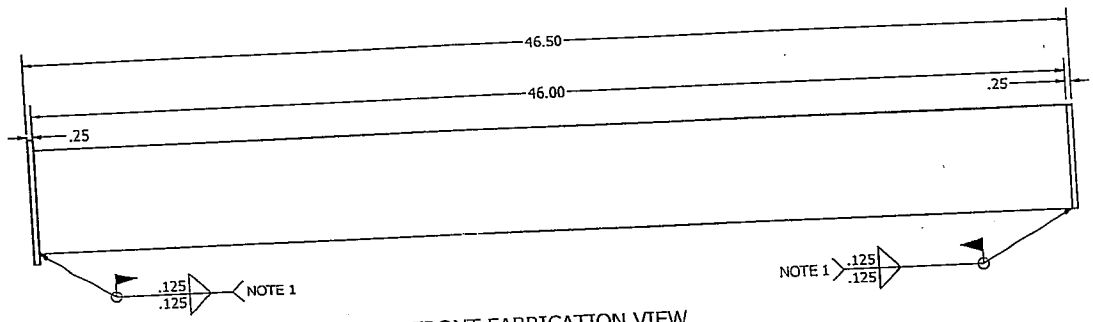

FRONT FABRICATION VIEW

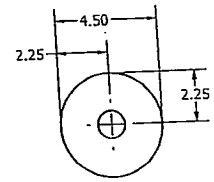

BOTTOM FABRICATION VIEW

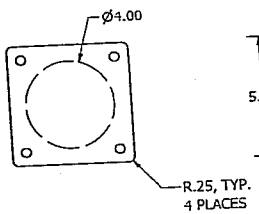

TOP PLATE END VIEW

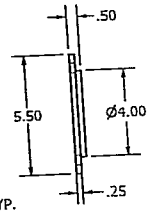

TOP PLATE SIDE VIEW

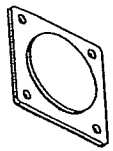

TOP PLATE ISOMETRIC VIEW

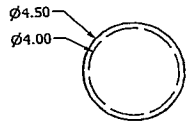

BOTTOM PLATE END VIEW

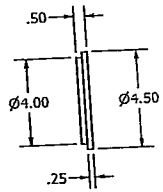

BOTTOM PLATE SIDE VIEW

BOTTOM PLATE ISOMETRIC VIEW

CABLE PASS THRU -003
AM FABRICATION DETAILS FOR 4.0" PVC

NOTES:
1. APPLY PRIMER, ITEM 5, AND ADHESIVE, ITEM 6, ALL AROUND JOINT PER MANUFACTURER DIRECTIONS.

UNLESS OTHERWISE SPECIFIED: DIMENSIONS ARE IN INCHES TOLERANCES DECIMALS .XX +/- .05 .XXX +/-.010 ANGULAR +/- .5 DO NOT SCALE DRAWING	DRAWN chuckc	10/19/2007	NATIONAL DATA BUOY CENTER John C. Stennis Space Center Stennis Space Center, Mississippi,39529
	CHECKED		TITLE CABLE PASS THRU
	QA		
	MFG		
	APPROVED		SIZE C / DWG NO 02.3F01107 / REV
			SCALE / SHEET 7 OF 7

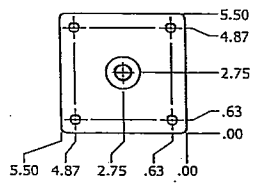

TOP VIEW

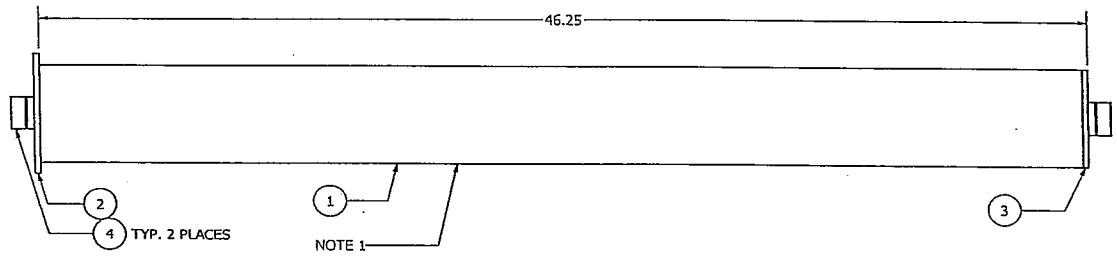

FRONT VIEW

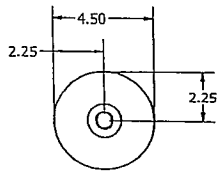

BOTTOM VIEW

NOTES:
1. SEE SHT. 7 FOR TUBE ASSEMBLY DETAILS.

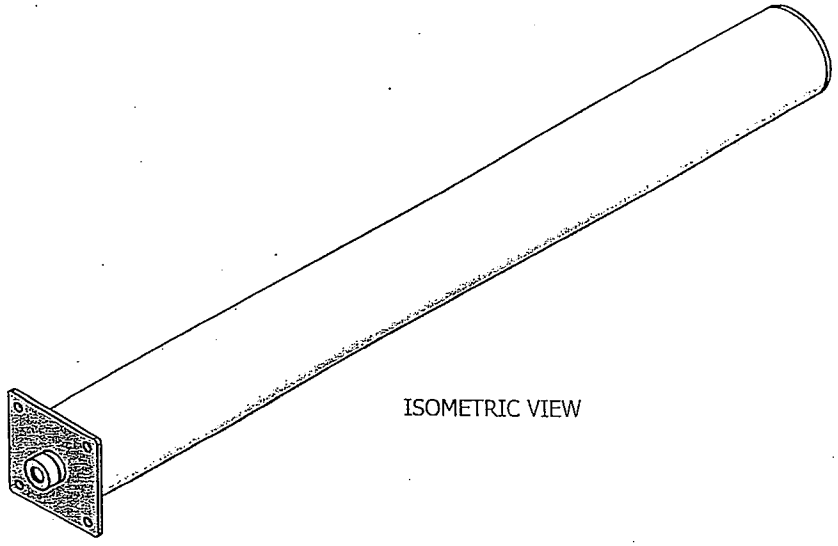

ISOMETRIC VIEW

CABLE PASS THRU -003
AM CONFIGURATION FOR 4.0" PVC

ITEM	QTY	PART NUMBER	CONTROL #	DESCRIPTION
6	AR	-	4714	ADHESIVE, SOLVENT, CLEAR, FOR PVC
5	AR	-	6209	PRIMER, SOLVENT, PURPLE, FOR PVC
4	2	McMASTER-CARR 7529K888	265	CONNECTOR, CORD GRIP, 1.00" NPT WITH 0.375 - 0.500 INSERT (BLUE)
3	1	McMASTER-CARR 8747K217	7308	SHEET, GRAY PVC, 0.50 X 4.50 DIA
2	1	McMASTER-CARR 8747K217	7308	SHEET, GRAY PVC, 0.50 X 4.50 X 4.50
1	1	McMASTER-CARR 48925K98	NSN	PIPE, SCH 40 PVC, WHITE, 4.0 NOMINAL, 4.5 OD X 46.0 LG

Parts List

UNLESS OTHERWISE SPECIFIED:
DIMENSIONS ARE IN INCHES
TOLERANCES
DECIMALS .XX +/- .05 .XXX +/-.010
ANGULAR +/- .5
DO NOT SCALE DRAWING

DRAWN	chuckc	10/19/2007
CHECKED		
QA		
MFG		
APPROVED		

NATIONAL DATA BUOY CENTER
John C. Stennis Space Center
Stennis Space Center, Mississippi,39529

TITLE
CABLE PASS THRU

SIZE	DWG NO	REV
C	02.3F01107	

SCALE

SHEET 6 OF 7

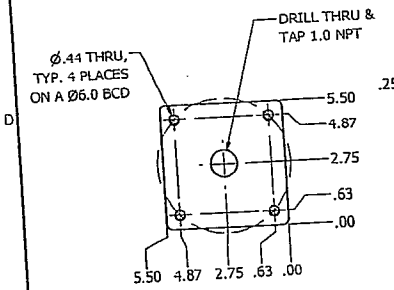

TOP FABRICATION VIEW

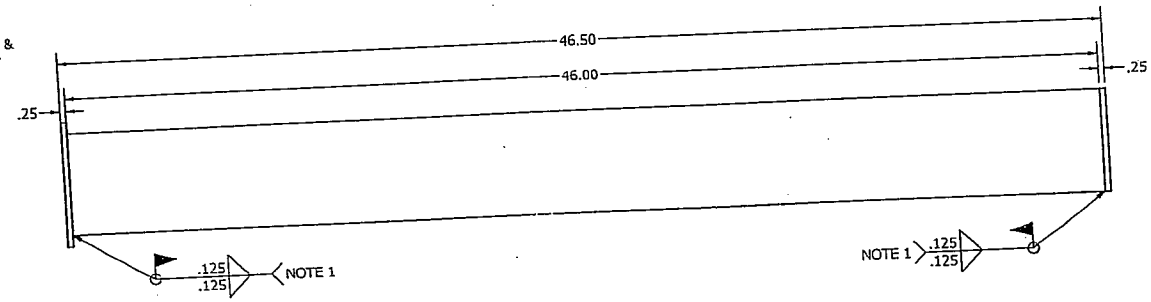

FRONT FABRICATION VIEW

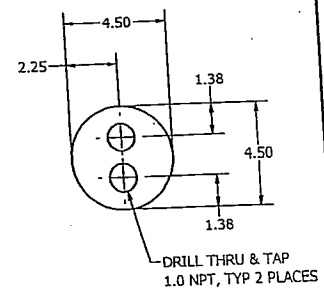

BOTTOM FABRICATION VIEW

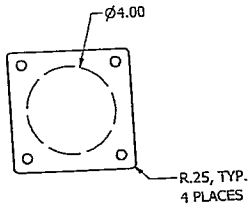

TOP PLATE END VIEW

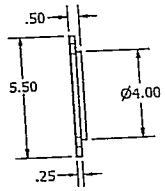

TOP PLATE SIDE VIEW

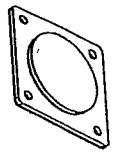

TOP PLATE ISOMETRIC VIEW

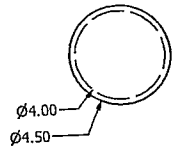

BOTTOM PLATE END VIEW

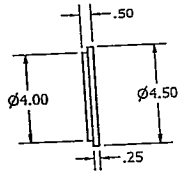

BOTTOM PLATE SIDE VIEW

BOTTOM PLATE ISOMETRIC VIEW

CABLE PASS THRU -002

IM / CT FABRICATON DETAILS FOR 4.0" PVC

NOTES:
1. APPLY PRIMER, ITEM 5, AND ADHESIVE, ITEM 6, ALL AROUND JOINT PER MANUFACTURER DIRECTIONS.

UNLESS OTHERWISE SPECIFIED: DIMENSIONS ARE IN INCHES TOLERANCES DECIMALS .XX +/- .05 .XXX +/-.010 ANGULAR +/- .5 DO NOT SCALE DRAWING	DRAWN chuckc	10/19/2007	NATIONAL DATA BUOY CENTER John C. Stennis Space Center Stennis Space Center, Mississippi,39529
	CHECKED		TITLE CABLE PASS THRU
	QA		
	MFG		
	APPROVED		SIZE C / DWG NO 02.3F01107 / REV
			SCALE / SHEET 5 OF 7

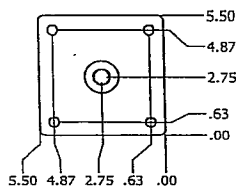

TOP VIEW

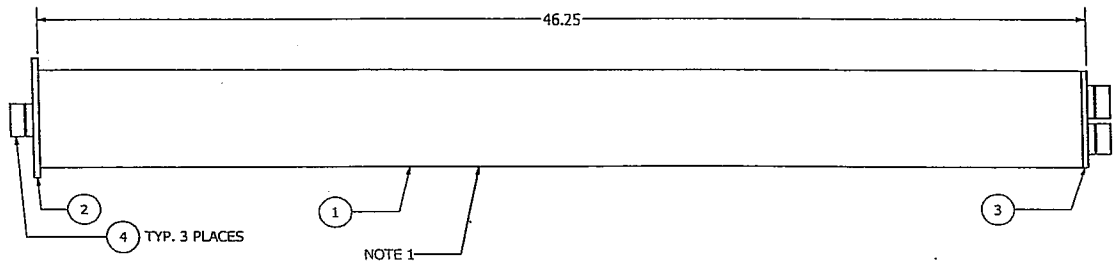

FRONT VIEW

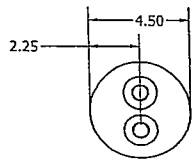

BOTTOM VIEW

NOTES:
1. SEE SHT. 5 FOR TUBE ASSEMBLY DETAILS.

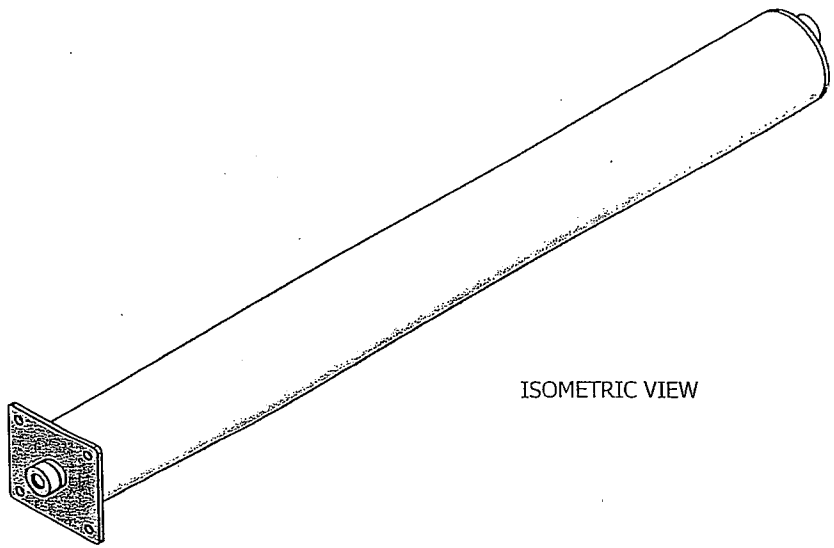

ISOMETRIC VIEW

CABLE PASS THRU -002
IM / CT CONFIGURATION FOR 4.0" PVC

ITEM	QTY	PART NUMBER	CONTROL #	DESCRIPTION
6	AR	-	4714	ADHESIVE, SOLVENT, CLEAR, FOR PVC
5	AR	-	6209	PRIMER, SOLVENT, PURPLE, FOR PVC
4	3	McMASTER-CARR 7529K888	265	CONNECTOR, CORD GRIP, 1.00" NPT WITH 0.375 - 0.500 INSERT (BLUE)
3	1	McMASTER-CARR 8747K217	7308	SHEET, GRAY PVC, 0.50 X 4.50 DIA
2	1	McMASTER-CARR 8747K217	7308	SHEET, GRAY PVC, 0.50 X 5.50 X 5.50
1	1	McMASTER-CARR 48925K98	NSN	PIPE, SCH 40 PVC, WHITE, 4.0 NOMINAL, 4.5 OD X 46.0 LG

Parts List

UNLESS OTHERWISE SPECIFIED:
DIMENSIONS ARE IN INCHES
TOLERANCES
DECIMALS .XX +/- .05 .XXX +/-.010
ANGULAR +/- .5
DO NOT SCALE DRAWING

DRAWN	chuckc	10/19/2007
CHECKED		
QA		
MFG		
APPROVED		

NATIONAL DATA BUOY CENTER
John C. Stennis Space Center
Stennis Space Center, Mississippi,39529

TITLE
CABLE PASS THRU

SIZE C | DWG NO 02.3F01107 | REV

SCALE | SHEET 4 OF 7

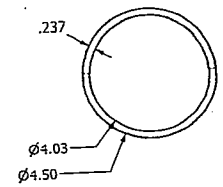

PIPE END VIEW

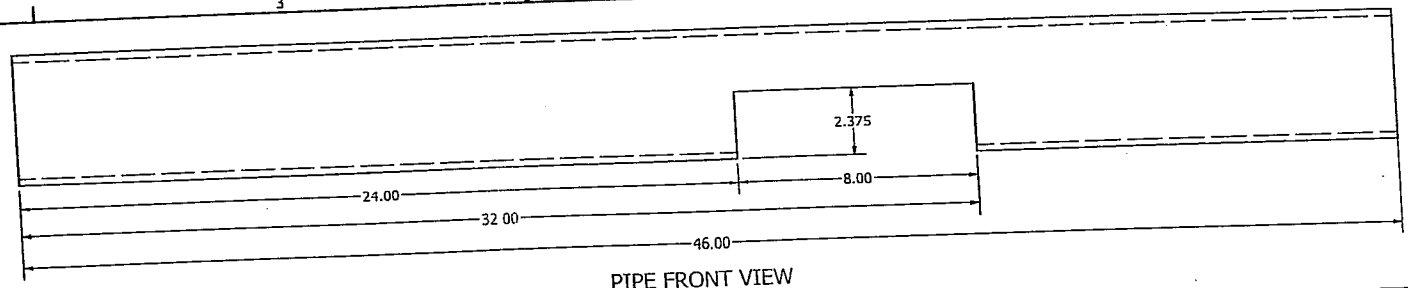

PIPE FRONT VIEW

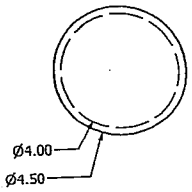

BOTTOM PLATE END VIEW

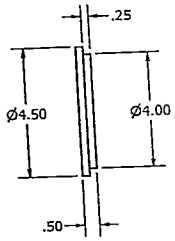

BOTTOM PLATE SIDE VIEW

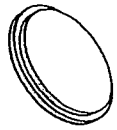

BOTTOM PLATE ISOMETRIC VIEW

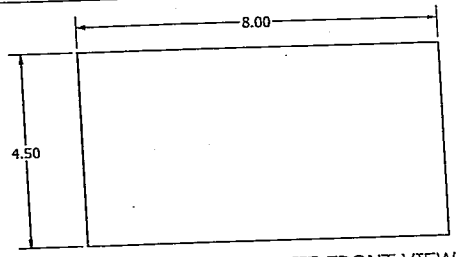

CUT-OUT COVER PLATE FRONT VIEW

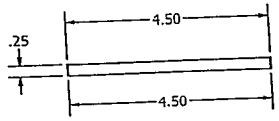

CUT-OUT COVER PLATE END VIEW

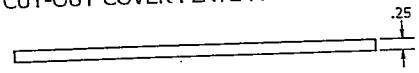

CUT-OUT COVER PLATE SIDE VIEW

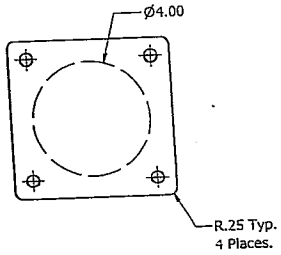

TOP PLATE END VIEW

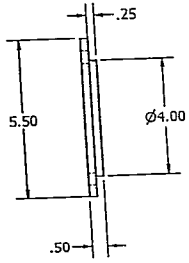

TOP PLATE SIDE VIEW

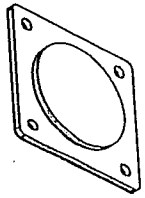

TOP PLATE ISOMETRIC VIEW

CUT-OUT CIRCULAR PLATE END VIEW

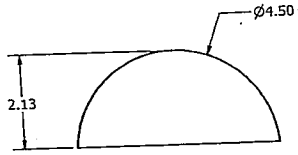

CUT-OUT CIRCULAR PLATE FRONT VIEW

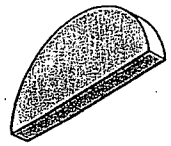

CUT-OUT CIRCULAR PLATE ISOMETRIC VIEW

CABLE PASS THRU -001

ADCP / SCM FABRICATION DETAILS FOR 4.0" PVC

UNLESS OTHERWISE SPECIFIED:
DIMENSIONS ARE IN INCHES
TOLERANCES
DECIMALS .XX +/- .05 .XXX +/-.010
ANGULAR +/- .5
DO NOT SCALE DRAWING

DRAWN	chuckc	10/19/2007
CHECKED		
QA		
MFG		
APPROVED		

NATIONAL DATA BUOY CENTER
John C. Stennis Space Center
Stennis Space Center, Mississippi,39529

TITLE: CABLE PASS THRU

SIZE	DWG NO	REV
C	02.3F01107	

SCALE | SHEET 3 OF 7

NOTES:
1. APPLY PRIMER, ITEM 7, AND ADHESIVE, ITEM 8, ALL AROUND JOINT PER MANUFACTURER DIRECTIONS.
2. SEE TOP PLATE CUT-OUT DETAIL ON SHEET 3.
3. SEE BOTTOM PLATE CUT-OUT DETAIL ON SHEET 3.
4. SEE NOTCHED PIPE CUTOUT AND CUTOUT PLATE DETAILS ON SHEET 3.

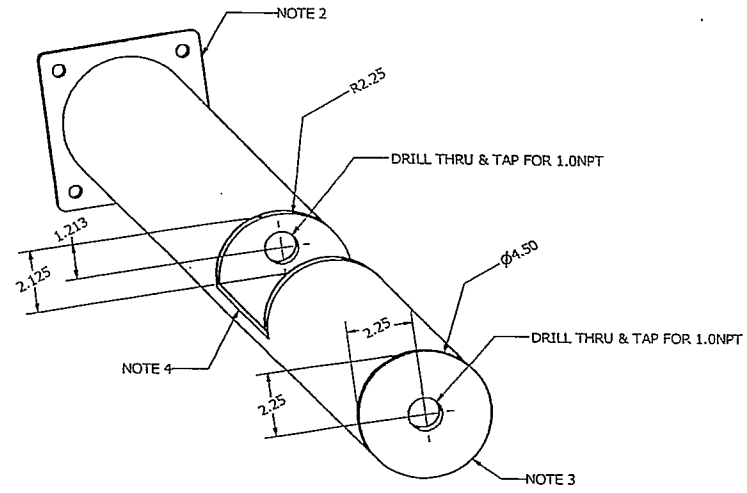

BOTTOM ISOMETRIC FABRICATION VIEW

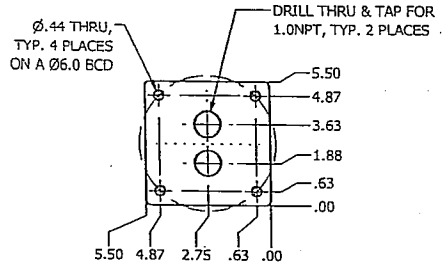

TOP FABRICATION VIEW

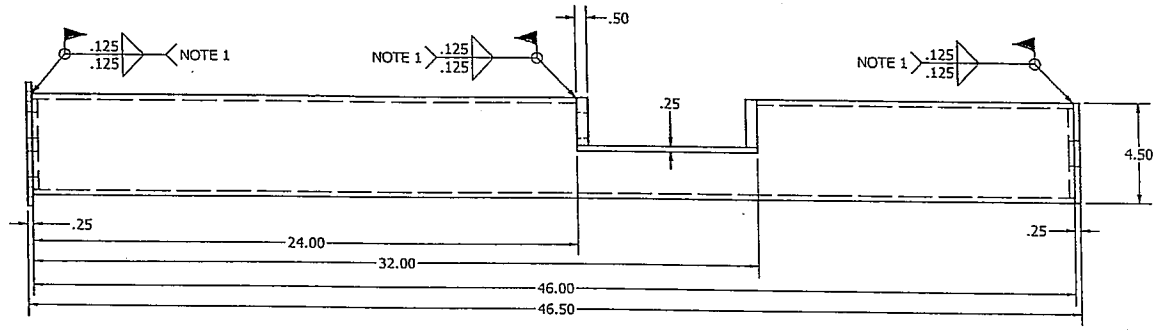

FRONT FABRICATION VIEW

CABLE PASS THRU -001
ADCP / SCM FABRICATION DETAILS FOR 4.0" PVC

UNLESS OTHERWISE SPECIFIED: DIMENSIONS ARE IN INCHES TOLERANCES DECIMALS .XX +/- .05 .XXX +/-.010 ANGULAR +/- .5 DO NOT SCALE DRAWING	DRAWN chuckc	10/19/2007	NATIONAL DATA BUOY CENTER John C. Stennis Space Center Stennis Space Center, Mississippi,39529
	CHECKED		TITLE CABLE PASS THRU
	QA		
	MFG		
	APPROVED		SIZE C / DWG NO 02.3F01107 / REV
			SCALE / SHEET 2 OF 7

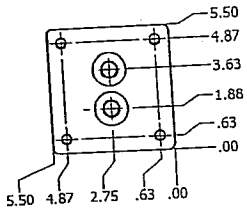

TOP VIEW

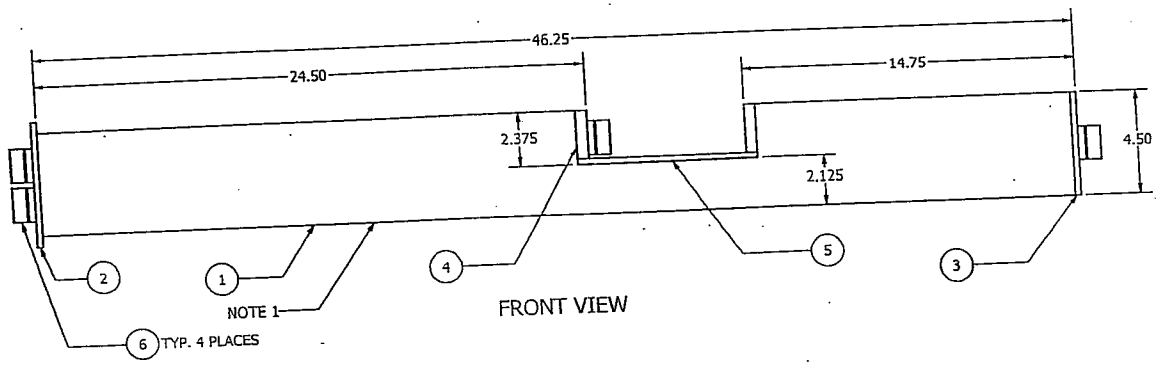

FRONT VIEW

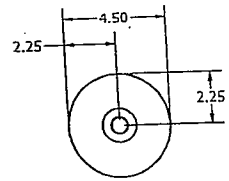

BOTTOM VIEW

NOTES:
1. SEE SHT. 2 FOR TUBE ASSEMBLY DETAILS.

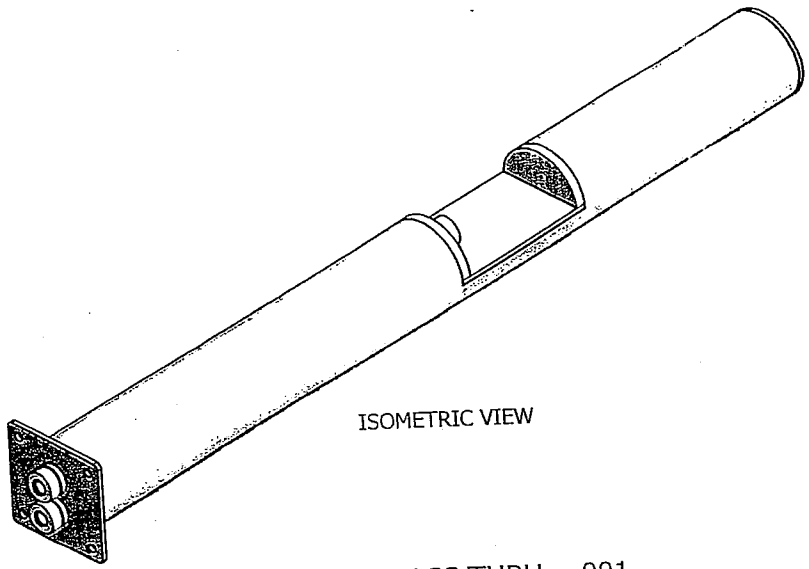

ISOMETRIC VIEW

CABLE PASS THRU -001

ADCP / SCM CONFIGURATION FOR 4.0" PVC

ITEM	QTY	PART NUMBER	CONTROL #	DESCRIPTION
8	AR	-	4714	ADHESIVE, SOLVENT, CLEAR, FOR PVC
7	AR	-	6209	PRIMER, SOLVENT, PURPLE, FOR PVC
6	4	McMASTER-CARR 7529K888	265	CONNECTOR, CORD GRIP, 1.00" NPT WITH 0.375 - 0.500 INSERT (BLUE)
5	1	McMASTER-CARR 8747K215	6955	SHEET, GRAY PVC, 0.25 X 8.00 X 4.50
4	2	McMASTER-CARR 8747K217	7308	SHEET, GRAY PVC, 0.50 X 4.50 DIA
3	1	McMASTER-CARR 8747K217	7308	SHEET, GRAY PVC, 0.50 X 4.50 DIA
2	1	McMASTER-CARR 8747K217	7308	SHEET, GRAY PVC, 0.50 X 5.50 X 5.50
1	1	McMASTER-CARR 48925K98	NSN	PIPE, SCH 40 PVC, WHITE, 4.0 NOMINAL, 4.5 OD X 46.0 LG

Parts List

UNLESS OTHERWISE SPECIFIED:
DIMENSIONS ARE IN INCHES
TOLERANCES
DECIMALS .XX +/- .05 .XXX +/-.010
ANGULAR +/- .5
DO NOT SCALE DRAWING

DRAWN	chuckc	10/19/2007
CHECKED		
QA		
MFG		
APPROVED		

NATIONAL DATA BUOY CENTER
John C. Stennis Space Center
Stennis Space Center, Mississippi,39529

TITLE
CABLE PASS THRU

SIZE	DWG NO	REV
C	02.3F01107	

SCALE

SHEET 1 OF 7

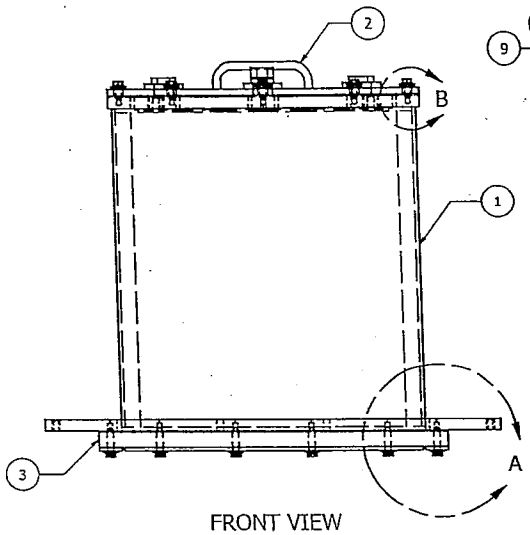

FRONT VIEW

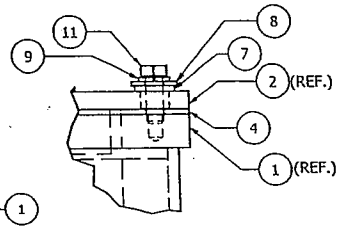

DETAIL B
TYP. 12 PLACES

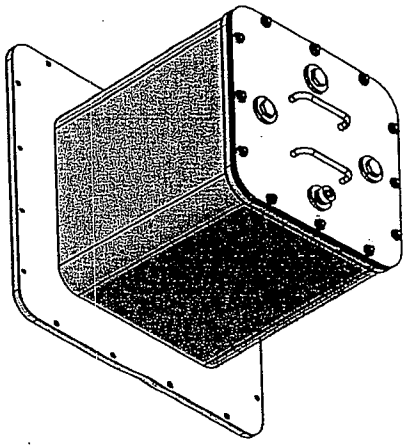

TOP ISOMETRIC VIEW

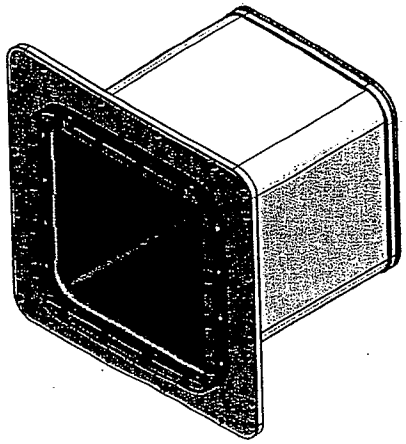

BOTTOM ISOMETRIC VIEW

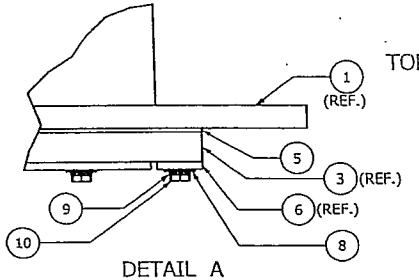

DETAIL A
TYP. 16 PLACES

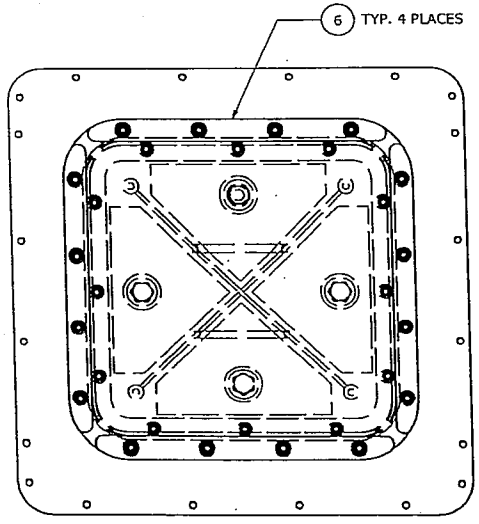

BOTTOM VIEW

LOWER WELL ASSEMBLY -001
BASIC CONFIGURATION

ITEM	QTY	PART NUMBER	CONTROL #	DESCRIPTION
11	12	McMASTER-CARR 93190A624	3248	SCREW, HEX CAP, 0.375-16 X 1.00, 316 SST, FULL THREAD (3/8-16 X 1)
10	16	McMASTER-CARR 92186A630	708	SCREW, HEX CAP, 0.375-16 X 1.75, 316 SST (3/8-16 X 1 3/4)
9	28	McMASTER-CARR 92147A031	723	WASHER, LOCK, HELICAL SPRING, 0.375 REG., 316 SST (3/8)
8	28	McMASTER-CARR 98017A200	13335	WASHER, FLAT, 0.375 REG., 18-8 SST (3/8)
7	12	02.3F01167-001	NSN	WELL LID BUSHING
6	4	02.3F01142-001	NSN	LOWER WELL WINDOW RETAINER
5	1	02.3F01141-001	NSN	LOWER WELL BOTTOM GASKET
4	1	02.3F01140-001	NSN	LOWER WELL TOP GASKET
3	1	02.3F01137-001	NSN	LOWER WELL WINDOW
2	1	02.3F01120-001	NSN	LOWER WELL LID ASSEMBLY
1	1	02.3F01119-001	NSN	LOWER WELL WELDMENT

Parts List

UNLESS OTHERWISE SPECIFIED:
DIMENSIONS ARE IN INCHES
TOLERANCES

DECIMALS	ANGULAR
.XX +/- .05	+/- .5
.XXX +/-.010	-

DO NOT SCALE DRAWING

DRAWN	chuckc	10/18/2007
CHECKED		
QA		
MFG		
APPROVED		

NATIONAL DATA BUOY CENTER
John C. Stennis Space Center
Stennis Space Center, Mississippi,39529

TITLE
LOWER WELL ASSEMBLY

SIZE	DWG NO	REV
C	02.3F01106	-

SCALE

SHEET 1 OF 1

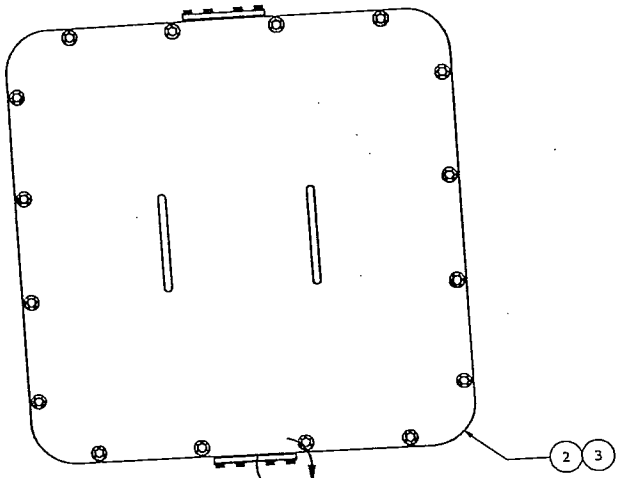

TOP VIEW

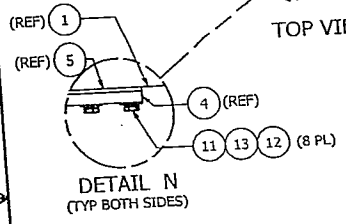

DETAIL N
(TYP BOTH SIDES)

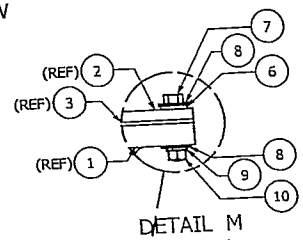

DETAIL M
(TYP 16 PL)

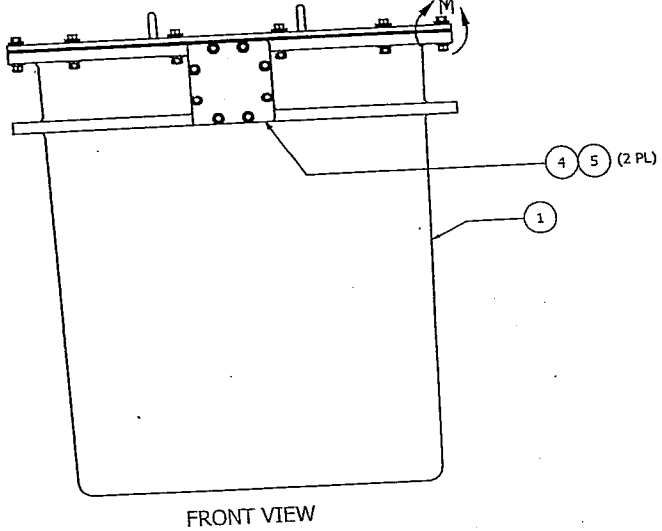

FRONT VIEW

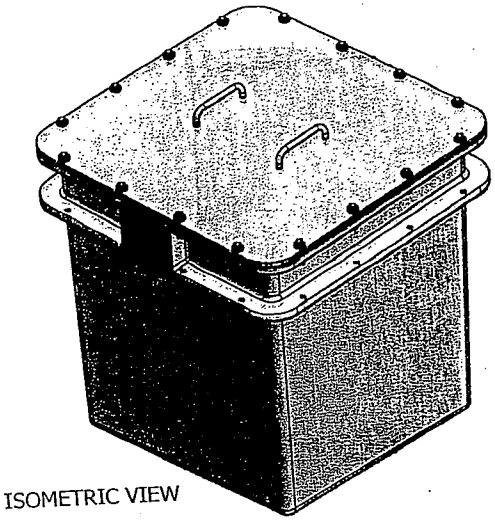

ISOMETRIC VIEW

UPPER WELL ASSEMBLY -002
EMPTY CONFIGURATION

ITEM	QTY	PART NUMBER	CONTROL #	DESCRIPTION
13	16	McMASTER-CARR 92147A029	662	WASHER, LOCK, HELICAL SPRING, 316 SST, 0.250 (1/4)
12	16	McMASTER CARR 91950A029	727	WASHER, FLAT, 316 SST, 0.250 (1/4)
11	16	McMASTER-CARR 93190A544	7238	SCREW, HEX CAP, 0.250-20X1.25, 316 SST (1/4-20X1.25)
10	16	DELTA FASTNERS NE3160370	2702	NUT, HEX NYLOCK, 0.375-16, 316 SST (3/8-16)
9	16	McMASTER-CARR 92147A031	723	WASHER, LOCK, HELICAL SPRING, 0.375 REG., 316 SST (3/8)
8	32	McMASTER-CARR 98017A200	13335	WASHER, FLAT, 0.375 REG., 18-8 SST (3/8)
7	16	McMASTER-CARR 92186A632	1572	SCREW, HEX CAP, 0.375-16X2.00, 316 SST (3/8-16X2.0)
6	16	02.3F01167-001	NSN	WELL LID BUSHING
5	2	Upper Well Face Plate Gasket	NSN	UPPER WELL FACE PLATE GASKET
4	2	02.3F01179-003	NSN	UPPER WELL FACE PLATE #3
3	1	Upper Well Lid Gasket	NSN	UPPER WELL LID GASKET
2	1	Upper Wel Lid Weldment	NSN	UPPER WELL LID
1	1	Upper Well Weldment	NSN	UPPER WELL SHELL ASSEMBLY

Parts List

UNLESS OTHERWISE SPECIFIED:
DIMENSIONS ARE IN INCHES
TOLERANCES
DECIMALS .XX +/- .05 .XXX +/-.010
ANGULAR +/- .5
DO NOT SCALE DRAWING

DRAWN	chuckc	10/17/2007
CHECKED		
QA		
MFG		
APPROVED		

NATIONAL DATA BUOY CENTER
John C. Stennis Space Center
Stennis Space Center, Mississippi,39529

TITLE
UPPER WELL ASSEMBLY

SIZE C | DWG NO 02.3F01105 | REV
SCALE | SHEET 2 OF 2

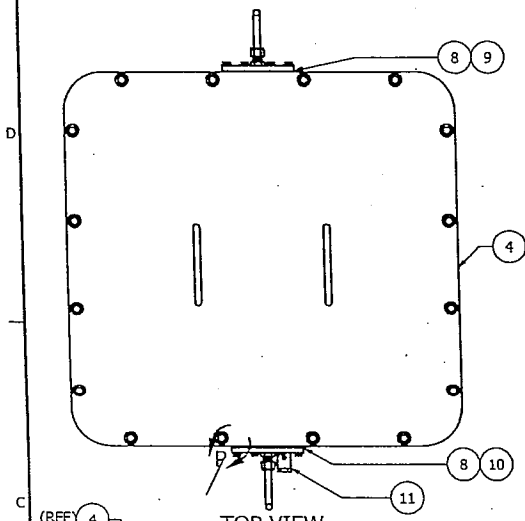

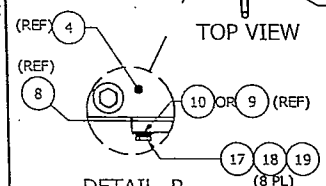

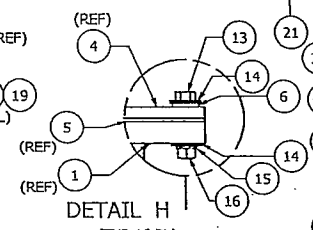

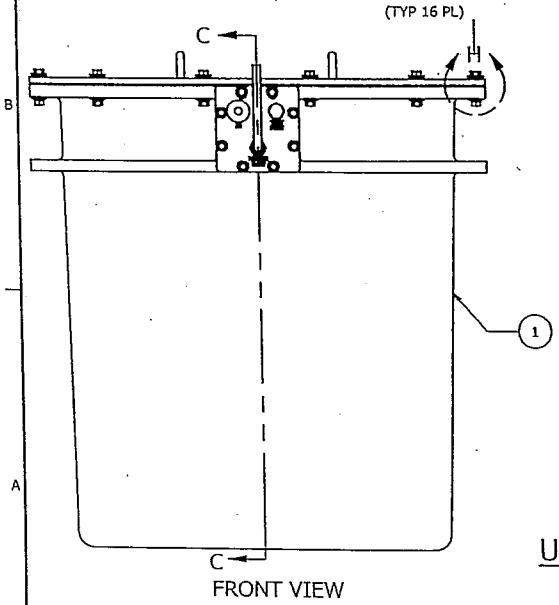

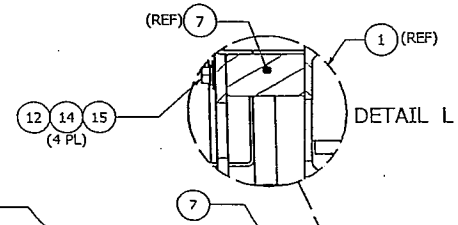

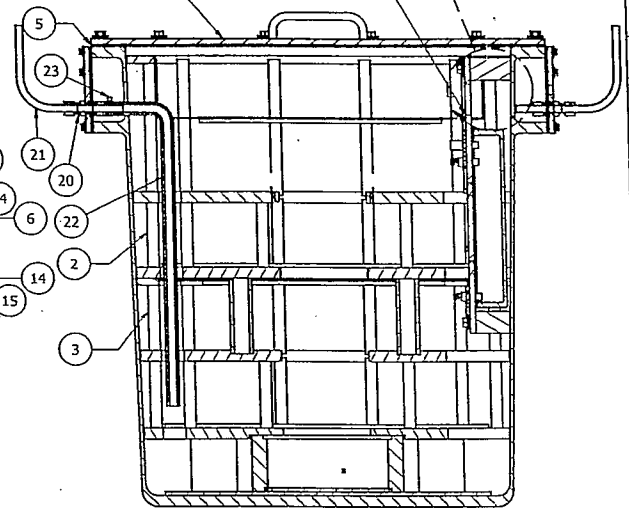

SECTION C-C

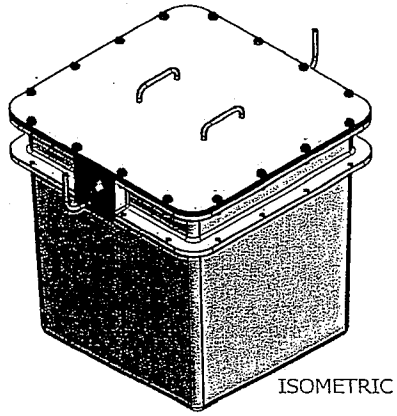

ISOMETRIC VIEW

ITEM	QTY	PART NUMBER	CONTROL #	DESCRIPTION
23	1	McMaster-Carr 45945K63	14107	5/8" Hose Clamp, Stainless Steel
22	1	McMaster-Carr 5304K831	14108	Rubber Vent Hose, Black, 1/2"
21	1	McMaster-Carr 89995K363	8428	1/2" X .065 Wall, Vent Tube Stainless Steel
20	1	Swagelok SS-810-61-BT	5273	SS Swagelok Tube Fitting, Bulkhead Union, 1/2 in. Tube OD
19	16	McMASTER-CARR 92147A029	0662	WASHER, LOCK, HELICAL SPRING, 316 SST, 0.250 (1/4)
18	16	McMASTER CARR 91950A029	0727	WASHER, FLAT, 316 SST, 0.250 (1/4)
17	16	McMASTER-CARR 93190A544	7238	SCREW, HEX CAP, 0.250-20X1.25, 316 SST (1/4-20X1.25)
16	16	DELTA FASTENERS NE3160370	2702	NUT, HEX NYLOCK, 0.375-16UNC, 316SST, (3/8)
15	20	DELTA FASTENERS WS316037	0723	WASHER, LOCK, 0.375, 316SST, HELICAL SPRING (3/8)
14	36	McMASTER CARR 98017A200	13335	WASHER, FLAT, 0.406 ID 1.000 OD, 316SST, (3/8)
13	16	McMASTER-CARR 92186A632	1572	SCREW, HEX CAP, 0.375-16X2.00, 316 SST (3/8-16X2.0)
12	4	McMASTER-CARR 93190A626	0829	SCREW, CAP HEX, 0.375-16X1.250, 316 SST (3/8-16-11/4)
11	1	02.3F01189-001	NSN	WELL TEST PORT
10	1	02.3F01179-002	NSN	UPPER WELL FACE PLATE #2
9	1	02.3F01179-001	NSN	UPPER WELL FACE PLATE #1
8	2	02.3F01181-002	NSN	UPPER WELL FACE PLATE GASKET
7	1	02.3F01117-001	NSN	POWER RAIL ENCLOSURE ASSEMBLY
6	16	02.3F01167-001	NSN	WELL LID BUSHING
5	1	02.3F01166-001	NSN	UPPER WELL LID GASKET
4	1	02.3F01112-001	NSN	UPPER WELL LID
3	1	02.3F01115-001	NSN	LOWER BATTERY RACK ASSEMBLY
2	1	02.3F01114-001	NSN	UPPER BATTERY RACK ASSEMBLY
1	1	02.3F01113-001	NSN	UPPER WELL SHELL ASSEMBLY

Parts List

UNLESS OTHERWISE SPECIFIED:
DIMENSIONS ARE IN INCHES
TOLERANCES
DECIMALS .XX +/- .05 .XXX +/-.010
ANGULAR +/- .5
DO NOT SCALE DRAWING

DRAWN	chuckc	10/17/2007
CHECKED		
QA		
MFG		
APPROVED		

NATIONAL DATA BUOY CENTER
John C. Stennis Space Center
Stennis Space Center, Mississippi,39529

TITLE: UPPER WELL ASSEMBLY

SIZE: C | DWG NO: 02.3F01105 | REV

SCALE | SHEET 1 OF 2

UPPER WELL ASSEMBLY -001
POWER CONFIGURATION

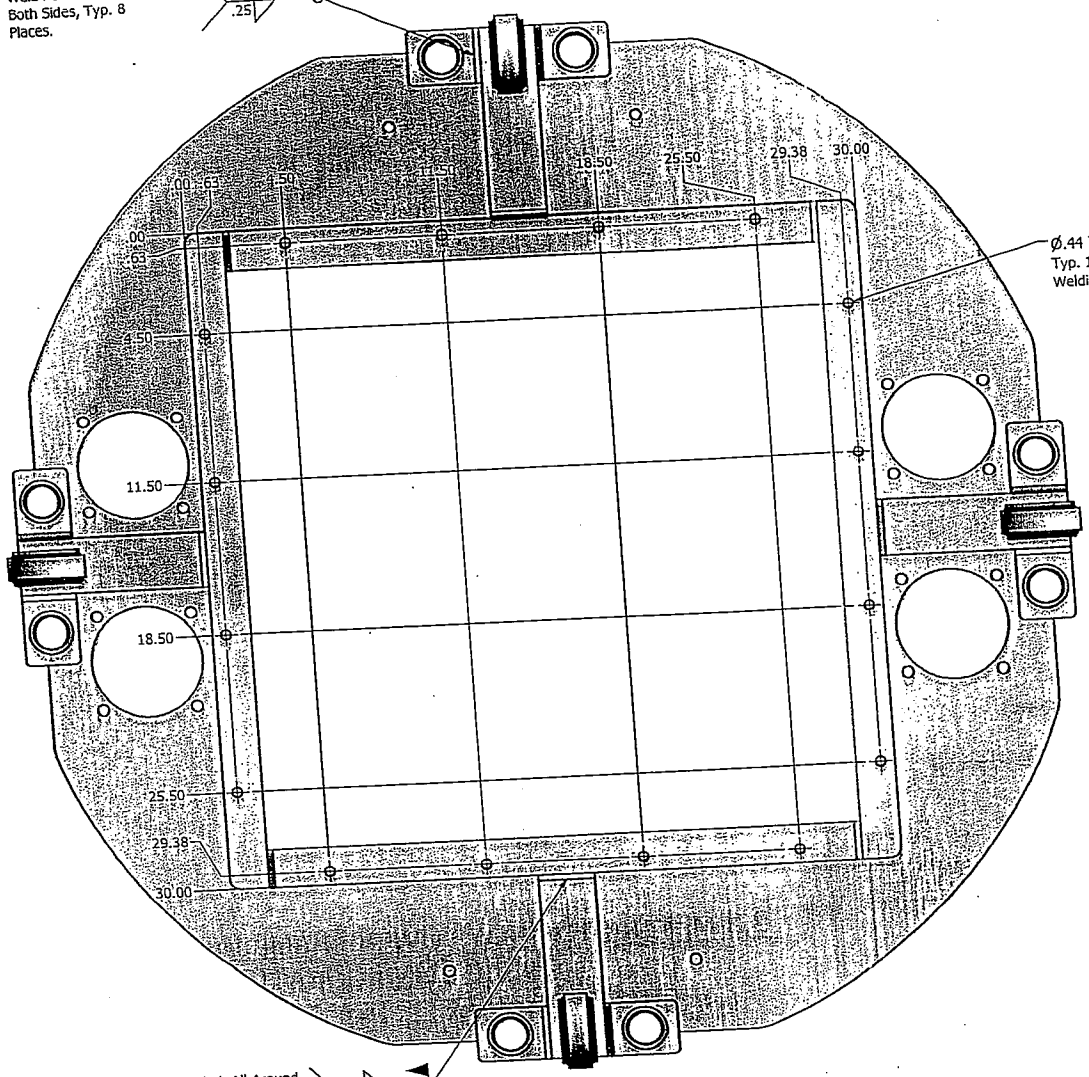

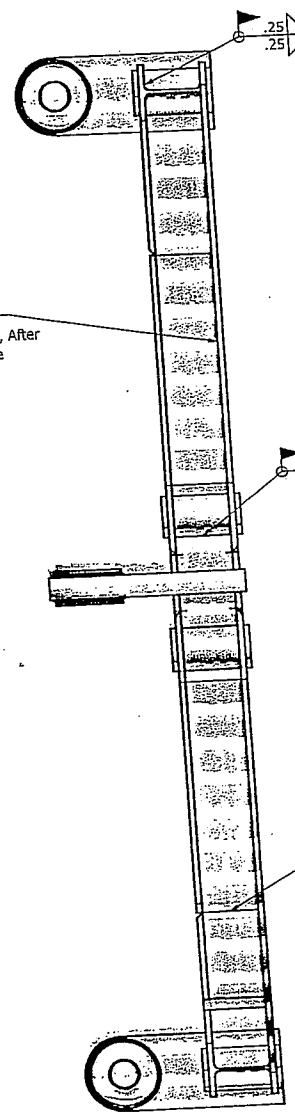

UNLESS OTHERWISE SPECIFIED: DIMENSIONS ARE IN INCHES TOLERANCES DECIMALS .XX +/- .05 .XXX +/-.010 ANGULAR +/- .5 DO NOT SCALE DRAWING	DRAWN chuckc	10/4/2007	NATIONAL DATA BUOY CENTER John C. Stennis Space Center Stennis Space Center, Mississippi,39529
	CHECKED		TITLE 2.3 METER STD BUOY LOWER FRAME WELDMENT
	QA		
	MFG		
	APPROVED		SIZE C / DWG NO 02.3F01104 / REV
			SCALE / SHEET 2 OF 2

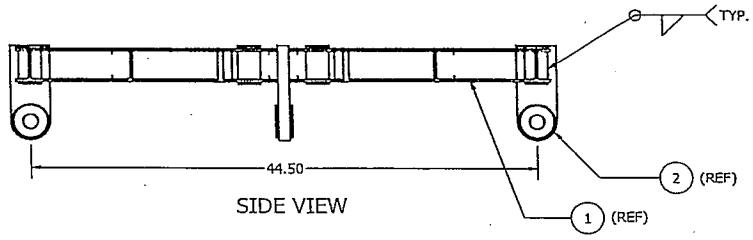

SIDE VIEW

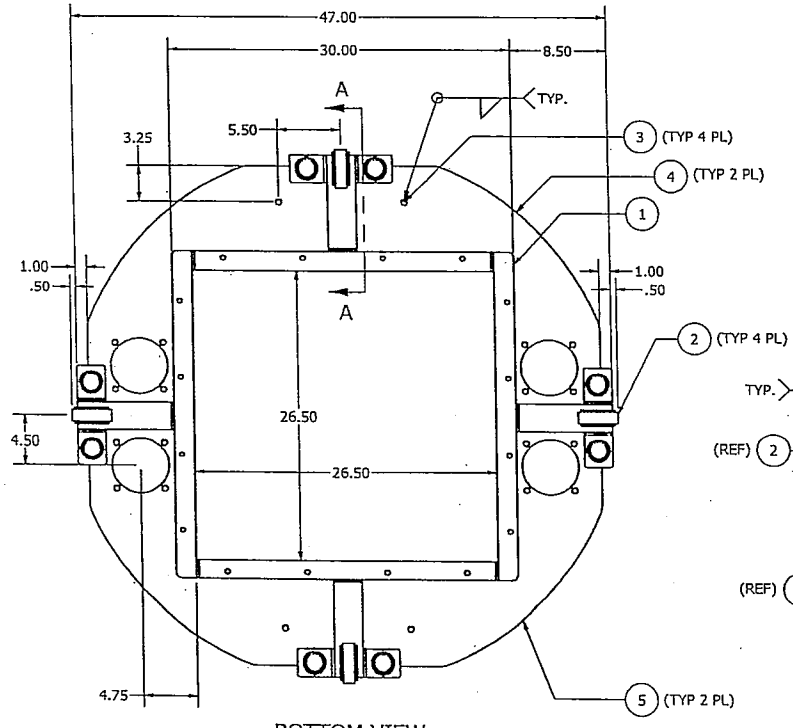

BOTTOM VIEW

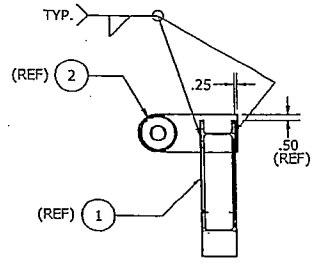

SECTION A-A

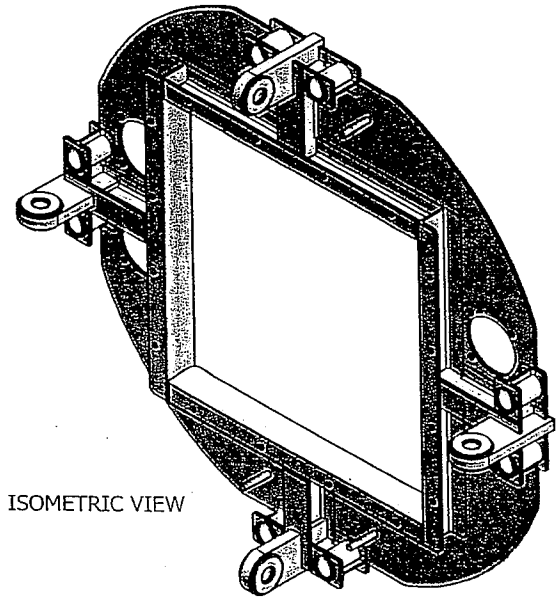

ISOMETRIC VIEW

2.3 METER STD BUOY LOWER FRAME WELDMENT -001
BASIC CONFIGURATION

ITEM	QTY	PART NUMBER	CONTROL #	DESCRIPTION
5	2	02.3F01157-002	NSN	LOWER BUOY FRAME PLATE NUMBER 2
4	2	02.3F01157-001	NSN	LOWER BUOY FRAME PLATE NUMBER 1
3	4	02.3F01159-001	NSN	ANODE/BALLAST RETAINING STUD
2	4	02.3F01111-001	NSN	LOWER PADEYE WELDMENT
1	1	02.3F01110-001	NSN	LOWER WELL MOUNT

Parts List

UNLESS OTHERWISE SPECIFIED:
DIMENSIONS ARE IN INCHES
TOLERANCES
DECIMALS .XX +/- .05 .XXX +/-.010
ANGULAR +/- .5
DO NOT SCALE DRAWING

DRAWN	chuckc	10/4/2007
CHECKED		
QA		
MFG		
APPROVED		

NATIONAL DATA BUOY CENTER
John C. Stennis Space Center
Stennis Space Center, Mississippi,39529

TITLE
2.3 METER STD BUOY LOWER FRAME WELDMENT

SIZE	DWG NO	REV
C	02.3F01104	

SCALE

SHEET 1 OF 2

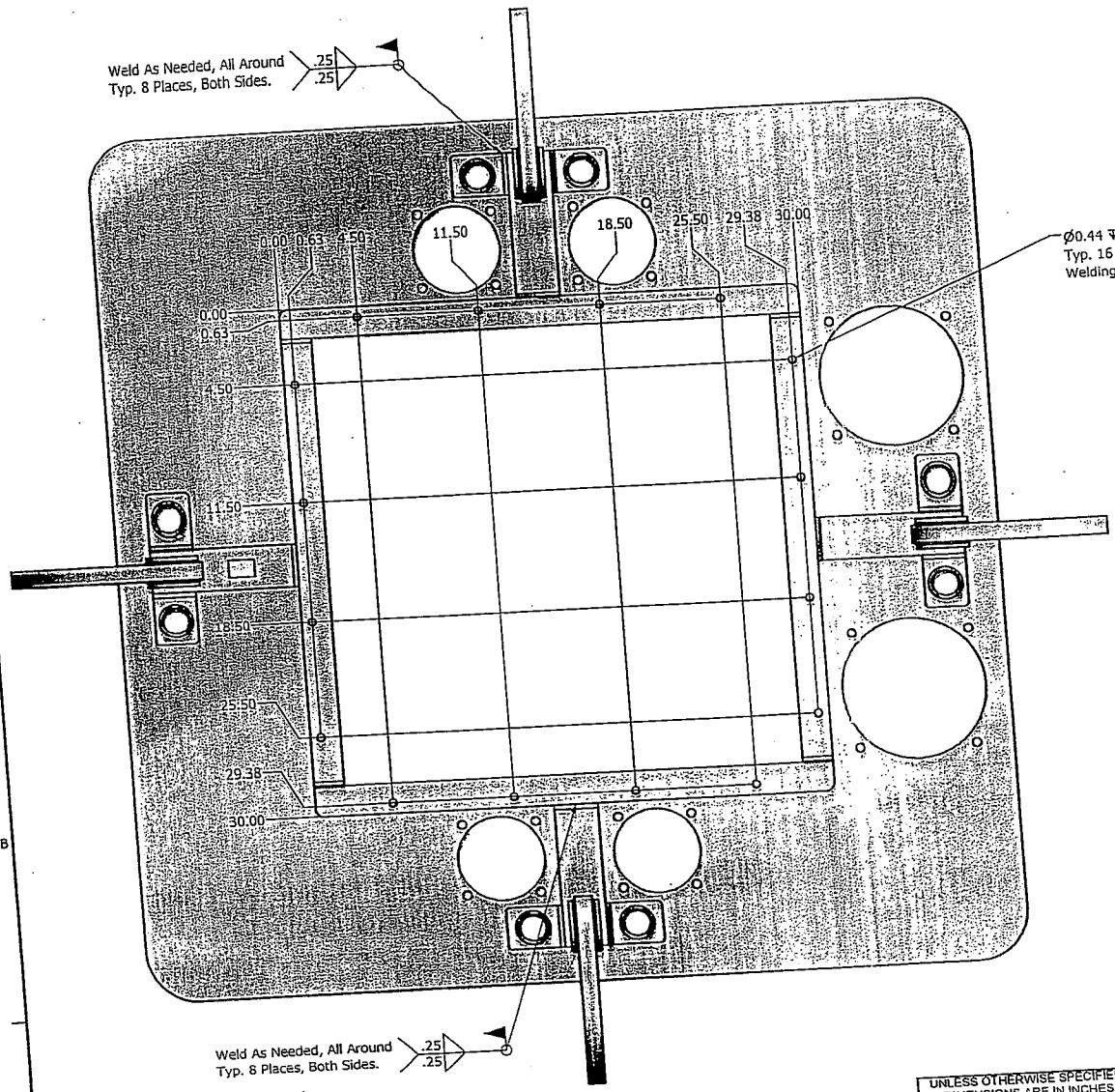

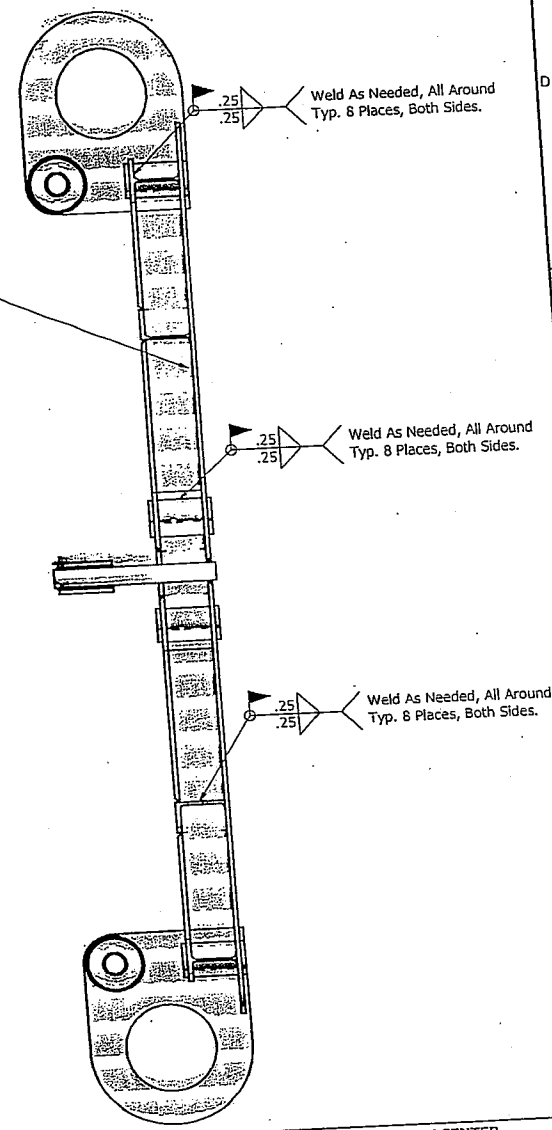

UNLESS OTHERWISE SPECIFIED:
DIMENSIONS ARE IN INCHES
TOLERANCES
DECIMALS .XX +/- .05 .XXX +/-.010
ANGULAR +/- .5
DO NOT SCALE DRAWING

DRAWN	chuckc	10/5/2007
CHECKED		
QA		
MFG		
APPROVED		

NATIONAL DATA BUOY CENTER
John C. Stennis Space Center
Stennis Space Center, Mississippi,39529

TITLE
2.3 METER STD BUOY UPPER FRAME WELDMENT

SIZE	DWG NO	REV
C	02.3F01103	
SCALE	SHEET 2 OF 2	

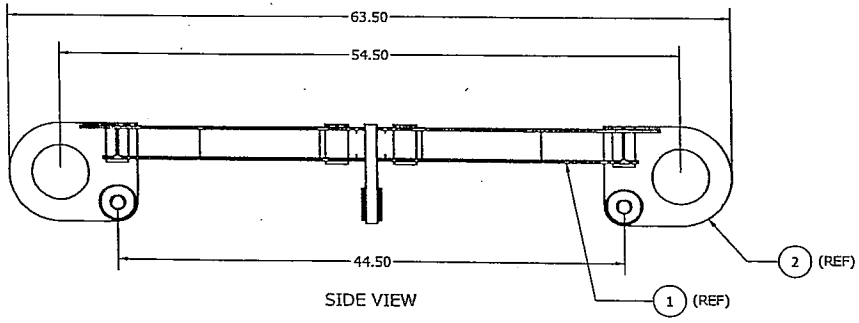

SIDE VIEW

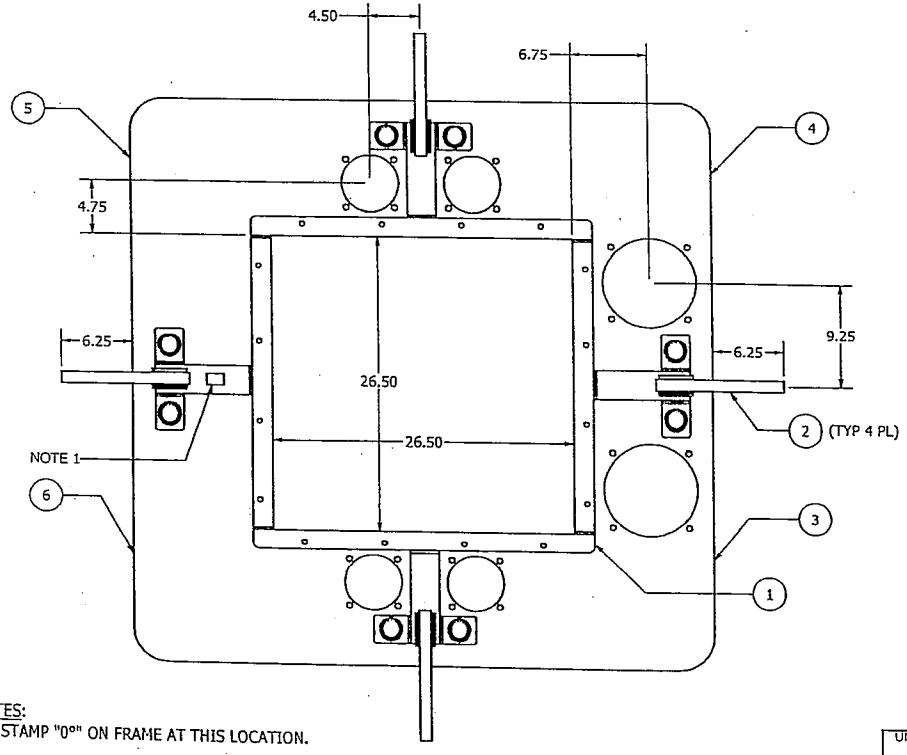

NOTES:
1. STAMP "0°" ON FRAME AT THIS LOCATION.

TOP VIEW

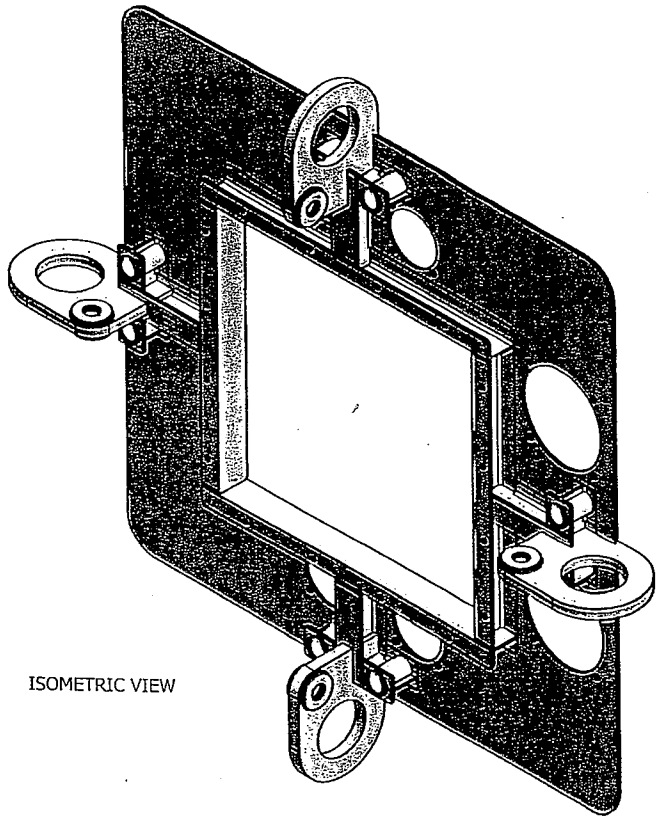

ISOMETRIC VIEW

2.3 METER STD BUOY UPPER FRAME WELDMENT -001
BASIC CONFIGURATION

ITEM	QTY	PART NUMBER	CONTROL #	DESCRIPTION
6	1	02.3F01156-004	NSN	UPPER FRAME PLATE #4
5	1	02.3F01156-003	NSN	UPPER FRAME PLATE #3
4	1	02.3F01156-002	NSN	UPPER FRAME PLATE #2
3	1	02.3F01156-001	NSN	UPPER FRAME PLATE #1
2	4	02.3F01109-001	NSN	UPPER PADEYE WELDMENT
1	1	02.3F01108-001	NSN	UPPER WELL MOUNT

Parts List

UNLESS OTHERWISE SPECIFIED:
DIMENSIONS ARE IN INCHES
TOLERANCES
DECIMALS .XX +/- .05 .XXX +/-.010
ANGULAR +/- .5
DO NOT SCALE DRAWING

DRAWN	chuckc	10/5/2007
CHECKED		
QA		
MFG		
APPROVED		

NATIONAL DATA BUOY CENTER
John C. Stennis Space Center
Stennis Space Center, Mississippi,39529

TITLE
2.3 METER STD BUOY UPPER FRAME WELDMENT

SIZE C | DWG NO 02.3F01103 | REV

SCALE | SHEET 1 OF 2

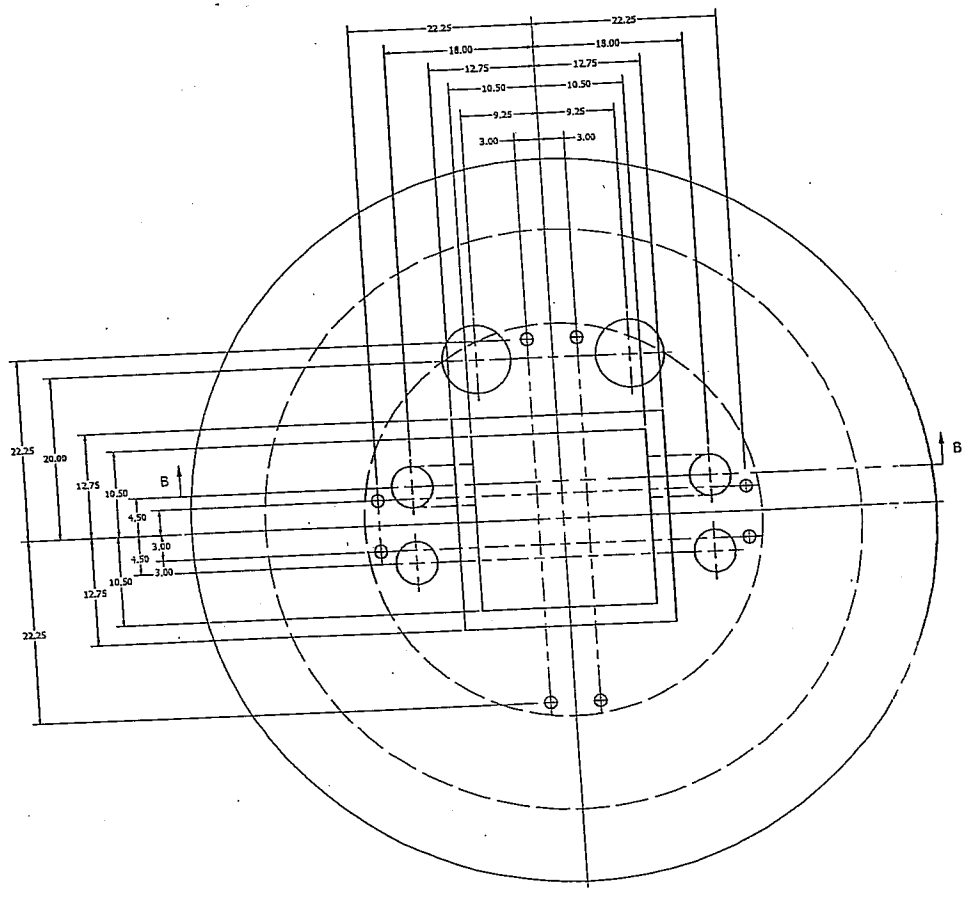

TOP HOLE CUTOUT DETAIL

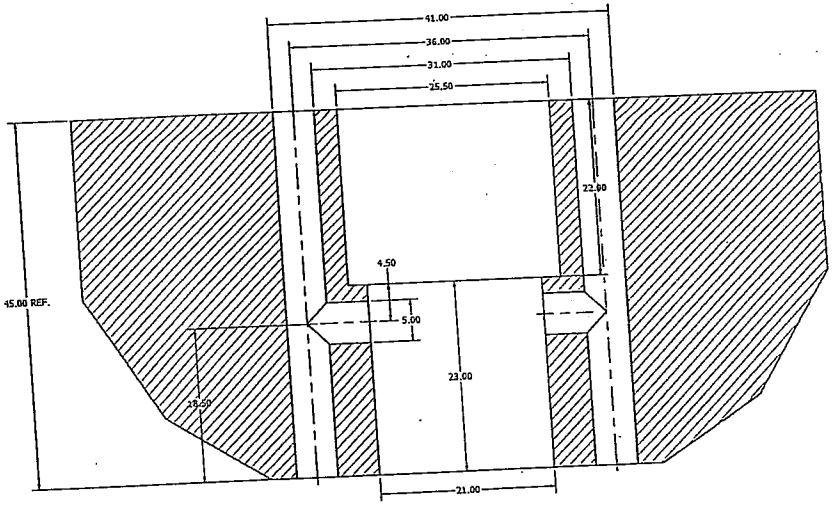

SECTION B-B

UNLESS OTHERWISE SPECIFIED, DIMENSIONS ARE IN INCHES TOLERANCES DECIMALS .XX +/-.05 .XXX +/-.010 ANGULAR +/- .5 DO NOT SCALE DRAWING	DRAWN T. RUTLEDGE	10/2/2007	NATIONAL DATA BUOY CENTER John C. Stennis Space Center Stennis Space Center, Mississippi 39529
	CHECKED		TITLE 2.3 METER STANDARD BUOY FOAM HULL
	QA		
	MFG		
	APPROVED		SIZE D / DWG NO 02.3F01102 / REV
			SCALE / SHEET 2 OF 2

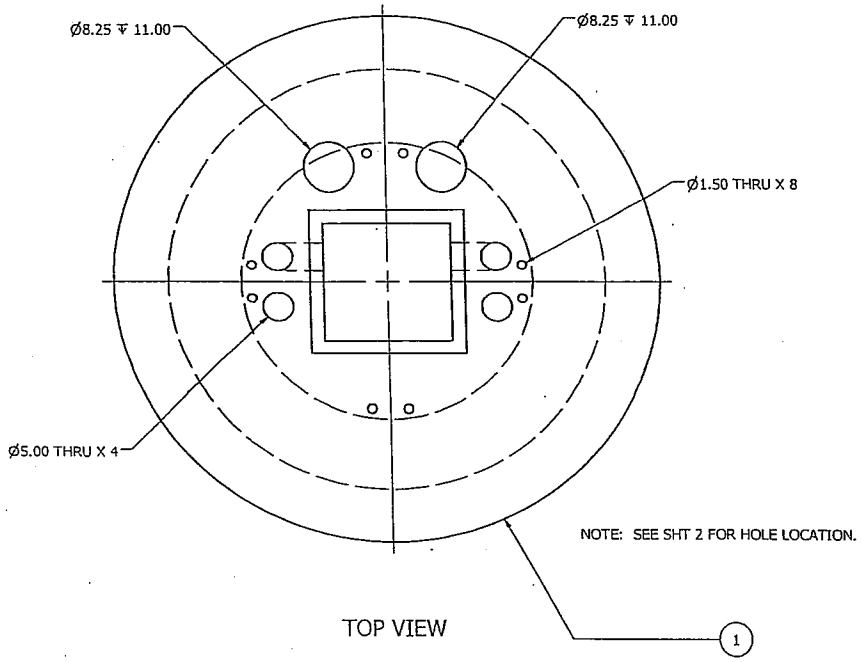

TOP VIEW

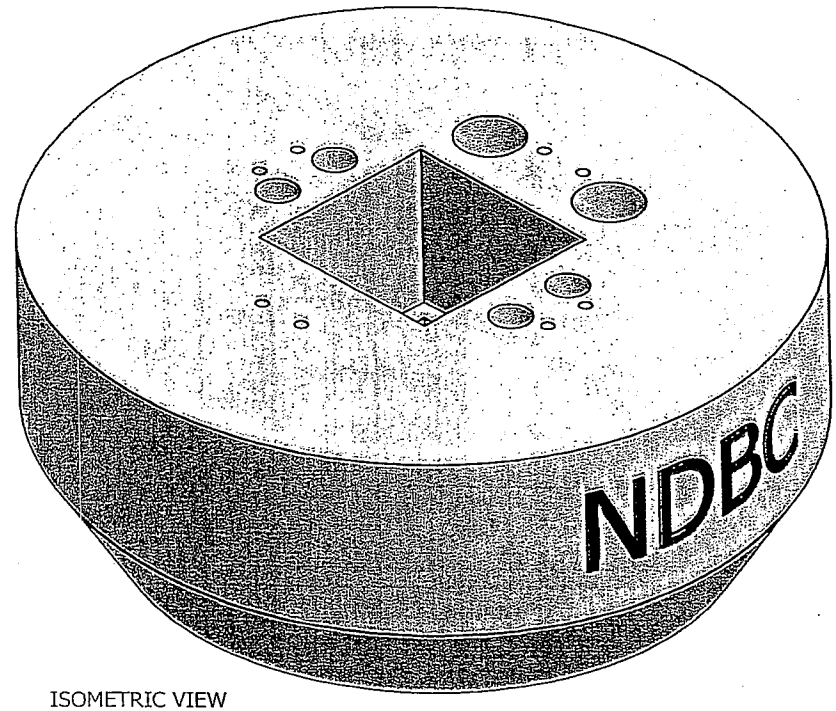

ISOMETRIC VIEW

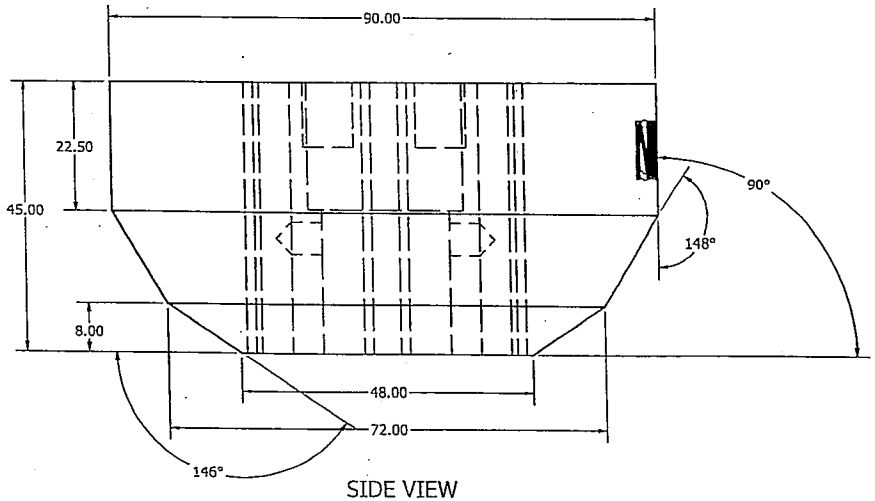

SIDE VIEW

2.3 METER STANDARD BUOY FOAM HULL -001
BASIC CONFIGURATION

ITEM	QTY	PART NUMBER	CONTROL #	DESCRIPTION
1	1	GILLMAN CORP. PER THIS DWG.	NSN	HULL, SURLYN FOAM, 90.00 DIA X 45.00 H, WITH CUTOUTS

Parts List

UNLESS OTHERWISE SPECIFIED:
DIMENSIONS ARE IN INCHES
TOLERANCES
DECIMALS .XX +/- .05 .XXX +/-.010
ANGULAR +/- .5
DO NOT SCALE DRAWING

DRAWN	T. RUTLEDGE	10/2/2007
CHECKED		
QA		
MFG		
APPROVED		

NATIONAL DATA BUOY CENTER
John C. Stennis Space Center
Stennis Space Center, Mississippi,39529

TITLE
2.3 METER STANDARD BUOY FOAM HULL

SIZE	DWG NO	REV
C	02.3F01102	

SCALE

SHEET 1 OF 2

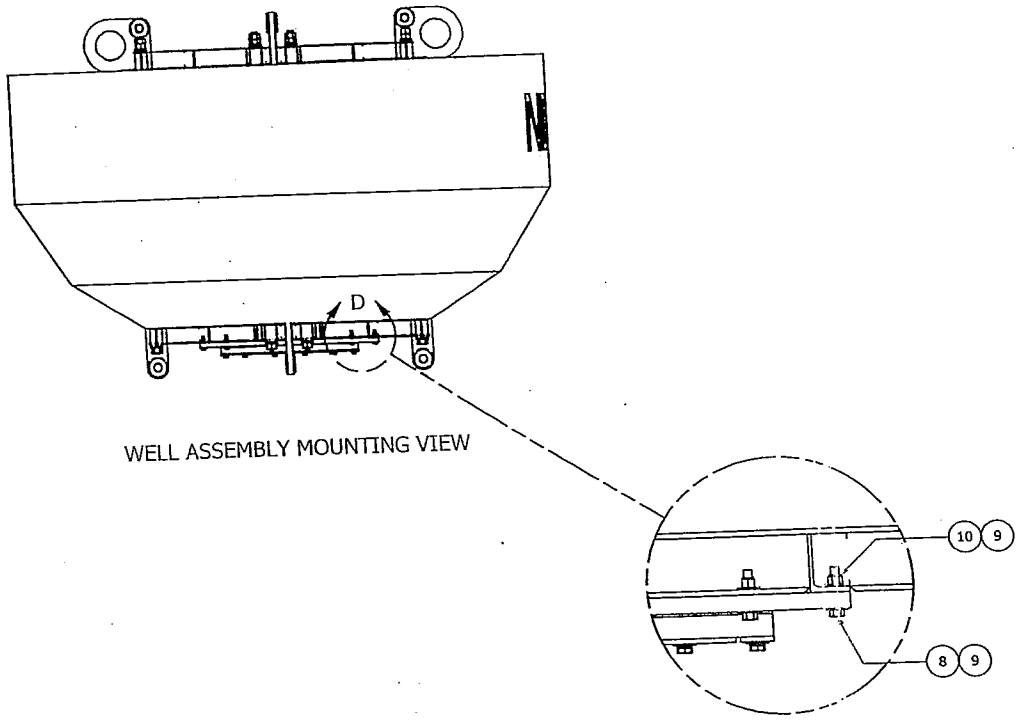

WELL ASSEMBLY MOUNTING VIEW

DETAIL D
(TYP 16 PL)

UNLESS OTHERWISE SPECIFIED: DIMENSIONS ARE IN INCHES TOLERANCES DECIMALS .XX +/- .05 .XXX +/-.010 ANGULAR +/- .5 DO NOT SCALE DRAWING	DRAWN chuckc	10/15/2007	NATIONAL DATA BUOY CENTER John C. Stennis Space Center Stennis Space Center, Mississippi,39529
	CHECKED		TITLE 2.3 METER STD BUOY BASIC HULL ASSEMBLY
	QA		
	MFG		
	APPROVED		SIZE C / DWG NO 02.3F01101 / REV
			SCALE / SHEET 2 OF 2

NOTES:
1 SEE SHT 2 FOR ASSEMBLY MOUNTING DETAILS.
2 GROUNDING PLATE, ITEM 5, INSERTS BETWEEN NUTS, ITEM 12 AT THIS LOCATION ONLY.

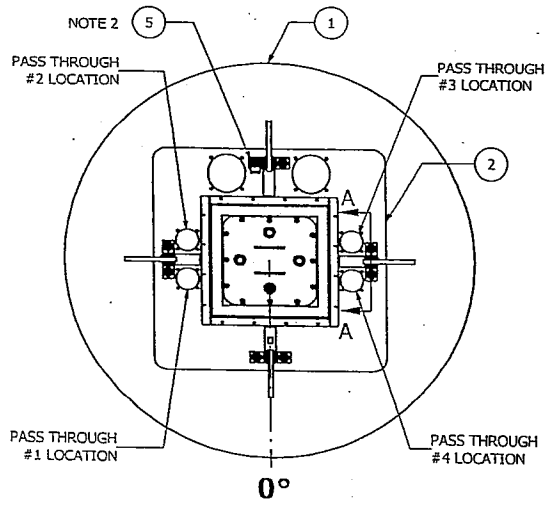

TOP VIEW

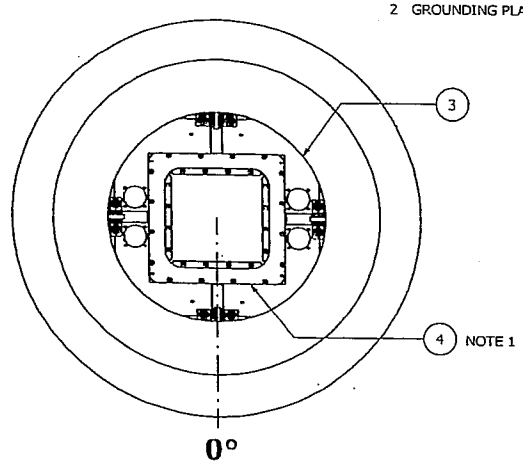

BOTTOM VIEW

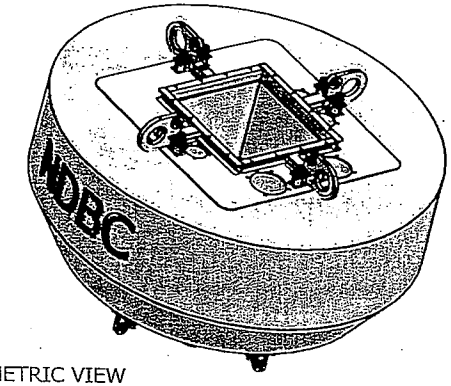

ISOMETRIC VIEW

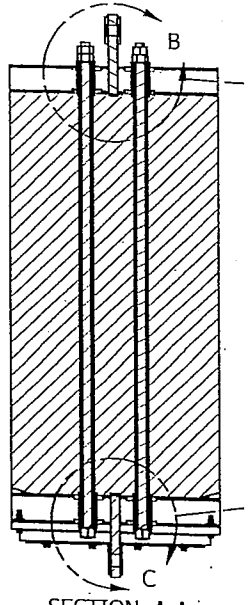

SECTION A-A
FRAME THRU BOLT DETAIL

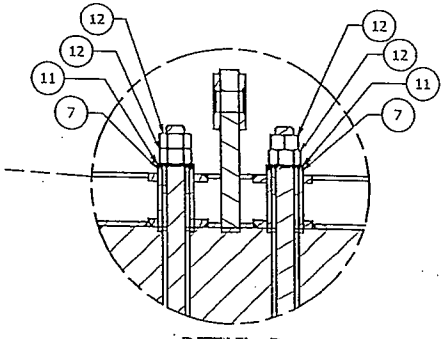

DETAIL B
(TYP 4 PL)

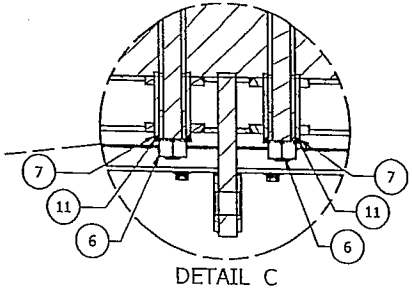

DETAIL C
(TYP 4 PL)

2.3 METER STD BUOY BASIC HULL ASSEMBLY -001
BASIC CONFIGURATION

ITEM	QTY	PART NUMBER	CONTROL #	DESCRIPTION
12	16	DELTA FASTENERS NF3161000	5409	NUT, HEX, 1.0-8, 316 SST
11	16	DELTA FASTENERS WCOM316100	2176	WASHER, FLAT, 1.0, 316SST
10	16	McMASTER-CARR 90715A145	2702	NUT, HEX NYLOCK, 0.375-16UNC, 316 SST (3/8-16)
9	32	McMASTER-CARR 98017A200	13335	WASHER, FLAT, 0.375 REG., 18-8 SST (3/8)
8	16	McMASTER-CARR 92186A632	1572	SCREW, HEX CAP, 0.375-16X2.00, 316 SST (3/8-16X2.0)
7	16	02.3F01151-001	NSN	FRAME THRU BOLT BUSHING
6	8	02.3F01150-001	NSN	FRAME THRU BOLT
5	1	02.3F01149-001	NSN	GROUNDING PLATE
4	1	02.3F01106-001	NSN	LOWER WELL ASSEMBLY
3	1	02.3F01104-001	NSN	2.3 METER STD BUOY LOWER FRAME WELDMENT
2	1	02.3F01103-001	NSN	2.3 METER STD BUOY UPPER FRAME WELDMENT
1	1	02.3F01102-001	NSN	2.3 METER STD BUOY FOAM HULL

Parts List

UNLESS OTHERWISE SPECIFIED:
DIMENSIONS ARE IN INCHES
TOLERANCES
DECIMALS .XX +/- .05 .XXX +/-.010
ANGULAR +/- .5
DO NOT SCALE DRAWING

DRAWN	chuckc	10/15/2007
CHECKED		
QA		
MFG		
APPROVED		

NATIONAL DATA BUOY CENTER
John C. Stennis Space Center
Stennis Space Center, Mississippi,39529

TITLE
2.3 METER STD BUOY BASIC HULL ASSEMBLY

SIZE	DWG NO	REV
C	02.3F01101	

SCALE

SHEET 1 OF 2

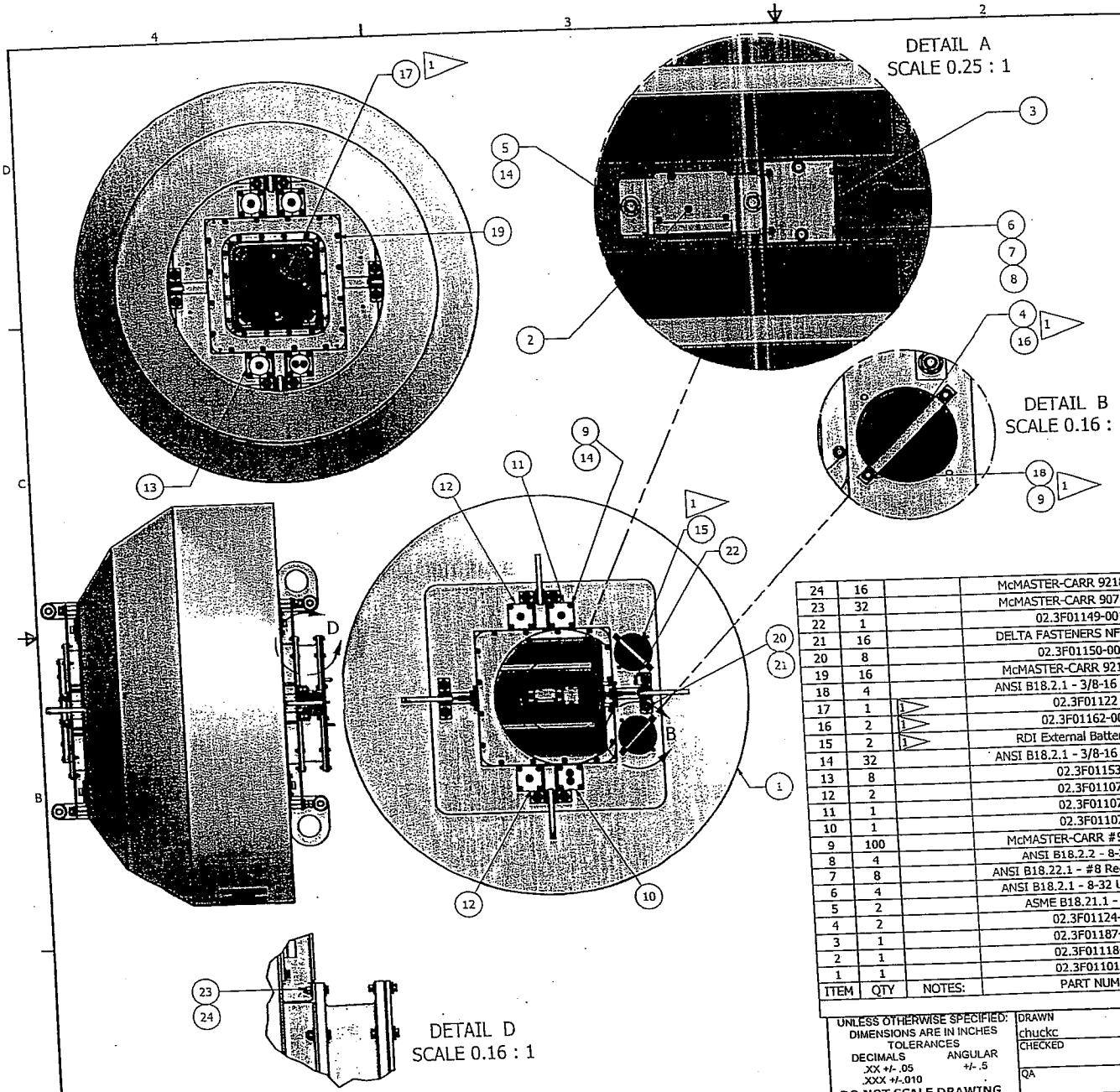

NOTE:
1 IF SENSORS / EQUIPMENT ARE NOT NEEDED, DO NOT INSTALL.

ITEM	QTY	NOTES:	PART NUMBER	DESCRIPTION
24	16		McMASTER-CARR 92186A630	SCREW, HEX CAP, 0.375-16 X 1.75, 316 SST (3/8-16 X 1 3/4)
23	32		McMASTER-CARR 90715A145	NUT, HEX NYLOCK, 0.375-16UNC, 316 SST (3/8-16)
22	1		02.3F01149-001	GROUNDING PLATE
21	16		DELTA FASTENERS NF3161000	NUT, HEX, 1.0-8, 316 SST
20	8		02.3F01150-001	FRAME THRU BOLT
19	16		McMASTER-CARR 92186A632	SCREW, HEX CAP, 0.375-16X2.00, 316 SST (3/8-16X2.0)
18	4		ANSI B18.2.1 - 3/8-16 UNC - 0.5	Hex Cap Screw
17	1	1	02.3F01122	75 KHZ Bracket Assembly
16	2	1	02.3F01162-001	AUXILLARY POWER STRAP
15	2	1	RDI External Battery Pack	RDI External Battery Pack
14	32		ANSI B18.2.1 - 3/8-16 UNC - 0.75	Hex Cap Screw
13	8		02.3F01153	Pass Thru Retainer Plate
12	2		02.3F01107	Pass Thru AM assembly
11	1		02.3F01107	Pass Thru IM CT Assembly
10	1		02.3F01107	Pass Thru ADCP SCM Assembly
9	100		McMASTER-CARR #98017A200	WASHER, FLAT, 0.375 REG., 18-8 SST (3/8)
8	4		ANSI B18.2.2 - 8-32 - SST	Hex Nut
7	8		ANSI B18.22.1 - #8 Regular - Type B	Washer A
6	4		ANSI B18.2.1 - 8-32 UNC - 0.6250	Socket Head Cap Screw
5	2		ASME B18.21.1 - 3/8 SST	Helical Spring Lock Washer
4	2		02.3F01124-001	Auxillary Power Strap Assembly
3	1		02.3F01187-001	Barometer Bracket
2	1		02.3F01118-001	Waves Bracket Weldment
1	1		02.3F01101-001	2.3 Meter Standard Buoy Basic Hull Assembly

Parts List

UNLESS OTHERWISE SPECIFIED:
DIMENSIONS ARE IN INCHES
TOLERANCES
DECIMALS .XX +/- .05 .XXX +/-.010
ANGULAR +/- .5
DO NOT SCALE DRAWING

DRAWN	chuckc	1/9/2008
CHECKED		
QA		
MFG		
APPROVED		

NATIONAL DATA BUOY CENTER
John C. Stennis Space Center
Stennis Space Center, Mississippi,39529

TITLE
2.3 Meter STD Buoy Hull Mechanical Assembly

SIZE C | DWG NO 02.3F01100 | REV
SCALE | SHEET 1 OF 1

2.3 Meter STD Buoy Hull Mechanical Assembly

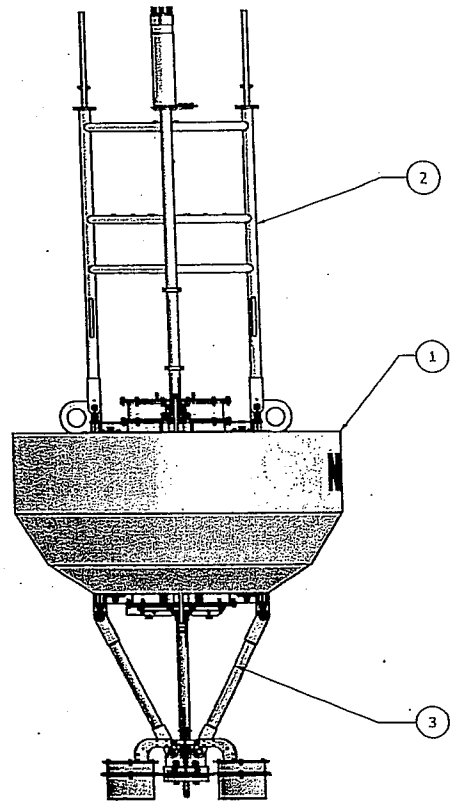

FRONT VIEW (0 DEGREES)

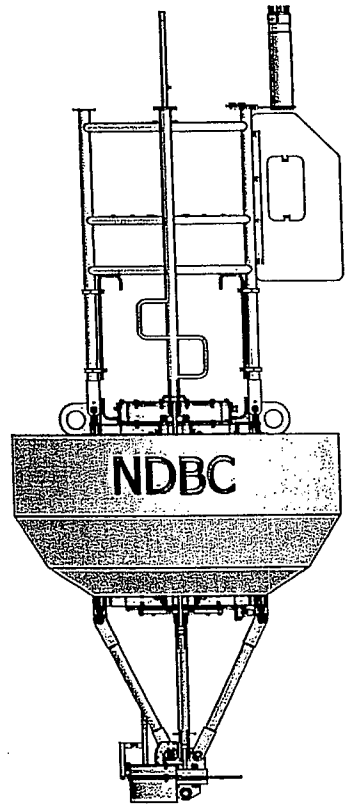

SIDE VIEW (270 DEGREES)

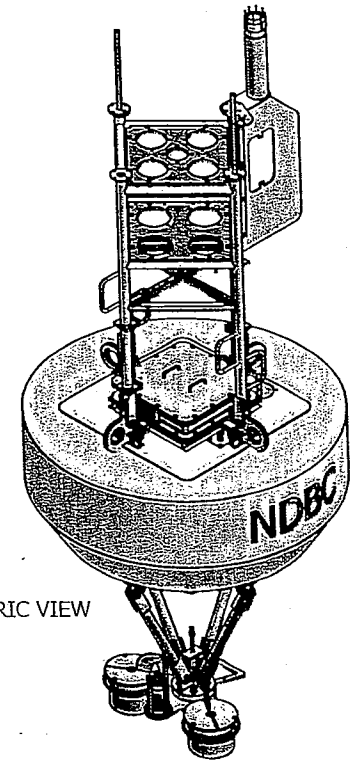

ISOMETRIC VIEW

ITEM	QTY	PART NUMBER	CONTROL #	DESCRIPTION
3	1	2.3FB1300-003	NSN	2.3 METER STANDARD BUOY BRIDLE MECHANICAL ASSEMBLY
2	1	02.3F01200-001	NSN	2.3 METER STANDARD BUOY MAST MECHANICAL ASSEMBLY
1	1	2.3FB1100-001	NSN	2.3 METER STANDARD BUOY HULL MECHANICAL ASSEMBLY

Parts List

UNLESS OTHERWISE SPECIFIED:
DIMENSIONS ARE IN INCHES
TOLERANCES
DECIMALS .XX +/- .05 .XXX +/-.010
ANGULAR +/- .5
DO NOT SCALE DRAWING

DRAWN	chuckc	10/24/2007
CHECKED		
QA		
MFG		
APPROVED		

NATIONAL DATA BUOY CENTER
John C. Stennis Space Center
Stennis Space Center, Mississippi,39529

TITLE
2.3 METER STD BUOY MECHANICAL SYSTEM ASSEMBLY

SIZE C | DWG NO 02.3FB1000 | REV
SCALE | SHEET 4 OF 4

2.3 METER STD BUOY MECHANICAL SYSTEM ASSEMBLY -004
WEATHER / DART CONFIGURATION (WEAH / DART)

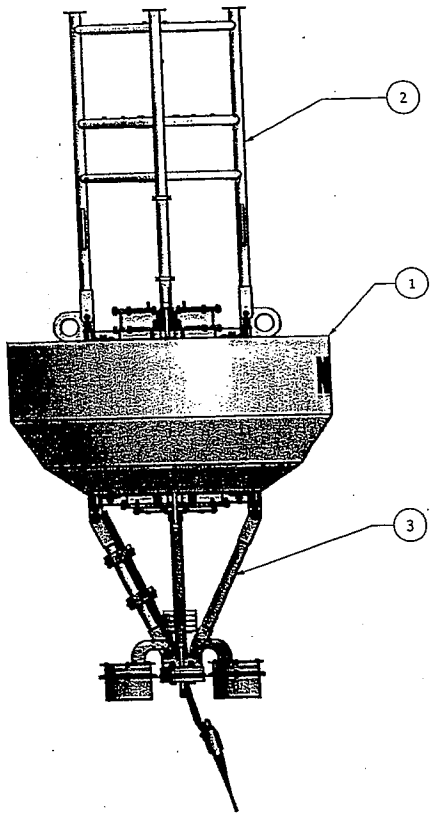

FRONT VIEW (0 DEGREES)

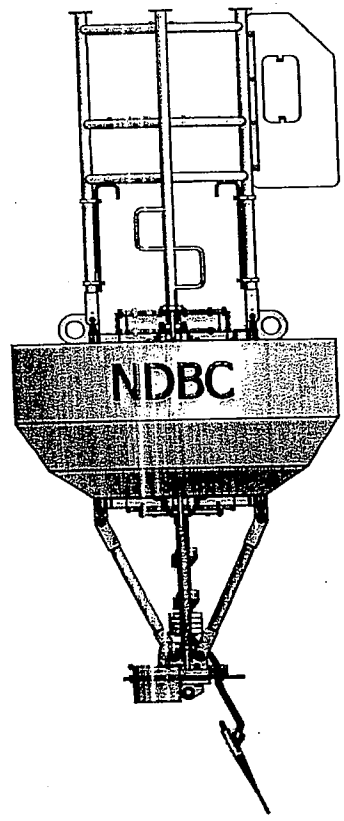

SIDE VIEW (270 DEGREES)

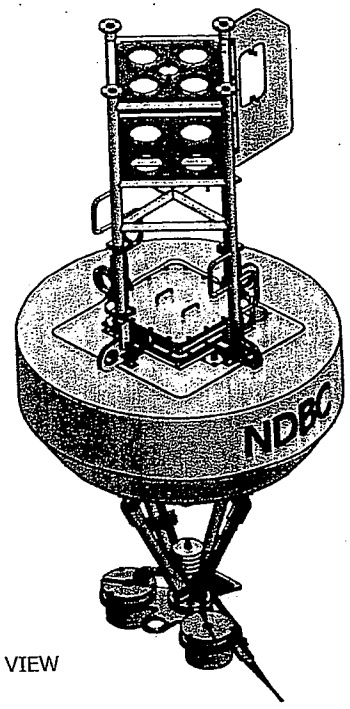

ISOMETRIC VIEW

ITEM	QTY	PART NUMBER	CONTROL #	DESCRIPTION
3	1	02.3FB1300-003	NSN	2.3 METER STANDARD BUOY BRIDLE MECHANICAL ASSEMBLY
2	1	02.3FB1200-003	NSN	2.3 METER STANDARD BUOY MAST MECHANICAL ASSEMBLY
1	1	02.3FB1100-003	NSN	2.3 METER STANDARD BUOY HULL MECHANICAL ASSEMBLY

Parts List

UNLESS OTHERWISE SPECIFIED:
DIMENSIONS ARE IN INCHES
TOLERANCES

DECIMALS	ANGULAR
.XX +/- .05	+/- .5
.XXX +/-.010	

DO NOT SCALE DRAWING

DRAWN	chuckc	10/24/2007
CHECKED		
QA		
MFG		
APPROVED		

NATIONAL DATA BUOY CENTER
John C. Stennis Space Center
Stennis Space Center, Mississippi,39529

TITLE
2.3 METER STD BUOY MECHANICAL SYSTEM ASSEMBLY

SIZE	DWG NO	REV
C	02.3FB1000	

SCALE | SHEET 3 OF 4

2.3 METER STD BUOY MECHANICAL SYSTEM ASSEMBLY -003

DART CONFIGURATION (DART)

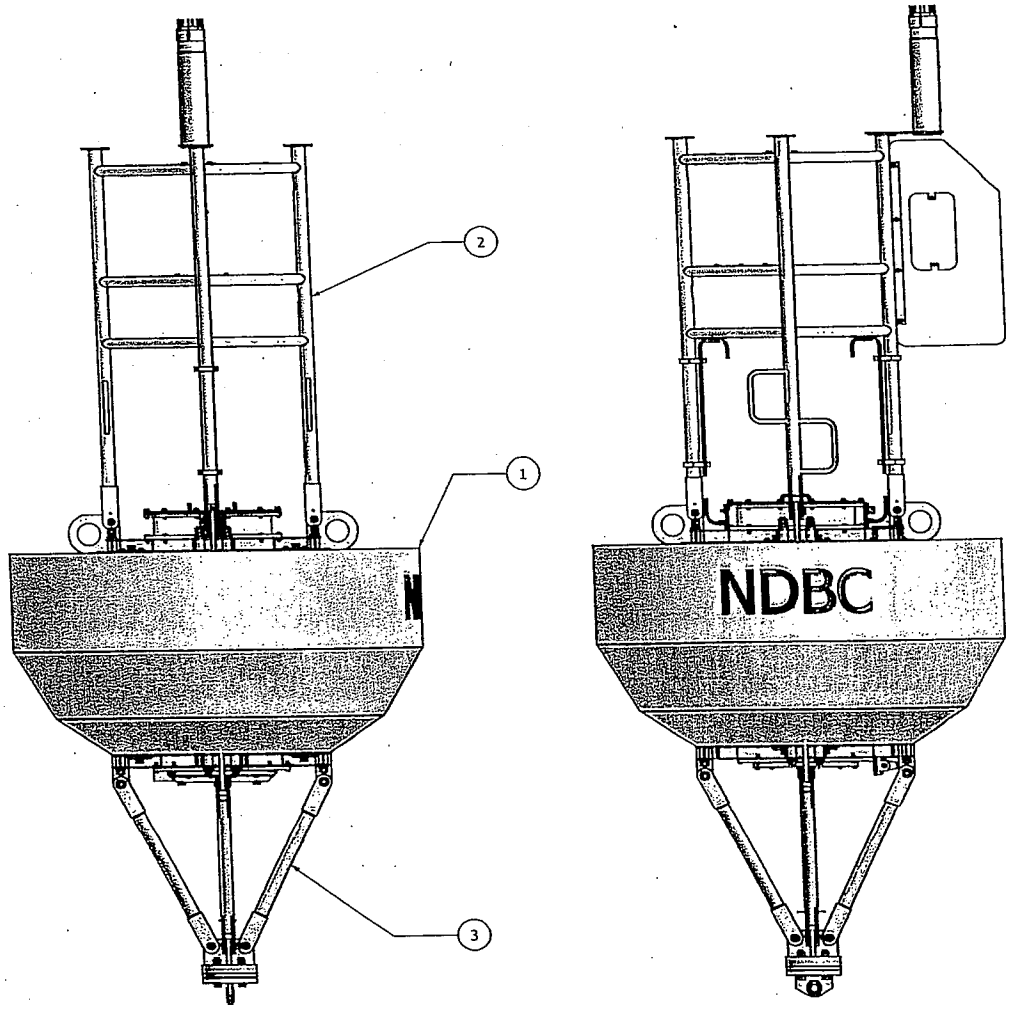

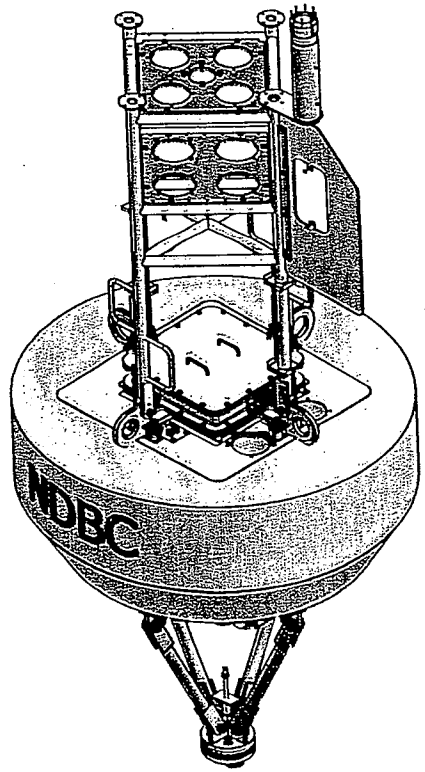

ITEM	QTY	PART NUMBER	Control #	DESCRIPTION
3	1	2.3FB1300-002	NSN	2.3 METER STANDARD BUOY BIDLE MECHANICAL ASSEMBLY
2	1	2.3FB1200-002	NSN	2.3 METER STANDARD BUOY MAST MECHANICAL ASSEMBLY
1	1	2.3FB1100-002	NSN	2.3 METER STANDARD BUOY HULL MECHANICAL ASSEMBLY

Parts List

2.3 STD BUOY MECHANICAL SYSTEM ASSEMBLY -002

TAO CONFIGURATION (TAO)

UNLESS OTHERWISE SPECIFIED:
DIMENSIONS ARE IN INCHES
TOLERANCES
DECIMALS .XX +/- .05 .XXX +/-.010
ANGULAR +/- .5
DO NOT SCALE DRAWING

DRAWN	chuckc	10/24/2007
CHECKED		
QA		
MFG		
APPROVED		

NATIONAL DATA BUOY CENTER
John C. Stennis Space Center
Stennis Space Center, Mississippi,39529

TITLE
2.3 METER STD BUOY MECHANICAL SYSTEM ASSEMBLY

SIZE	DWG NO	REV
C	02.3FB1000	

SCALE

SHEET 2 OF 4

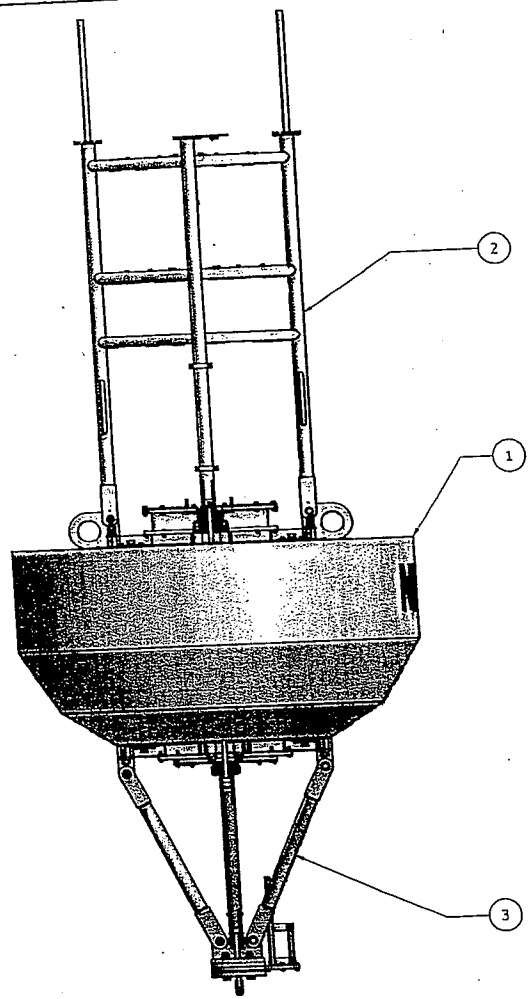

FRONT VIEW (0 DEGREES)

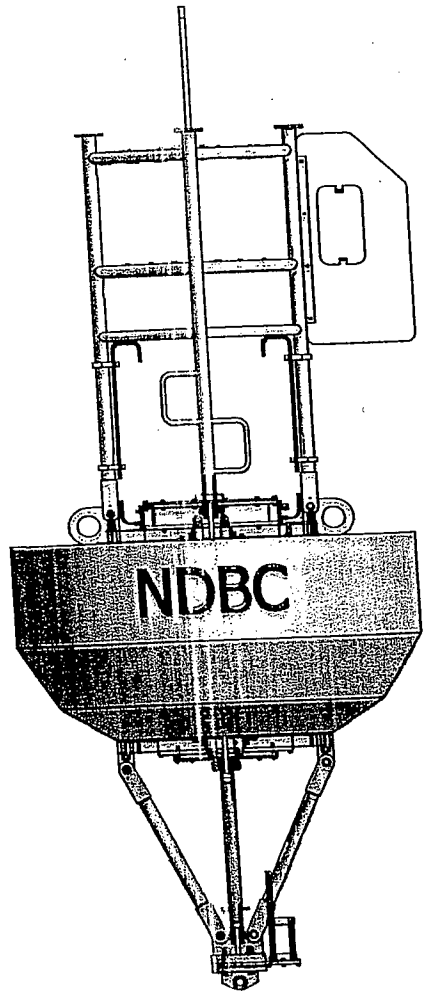

SIDE VIEW (270 DEGREES)

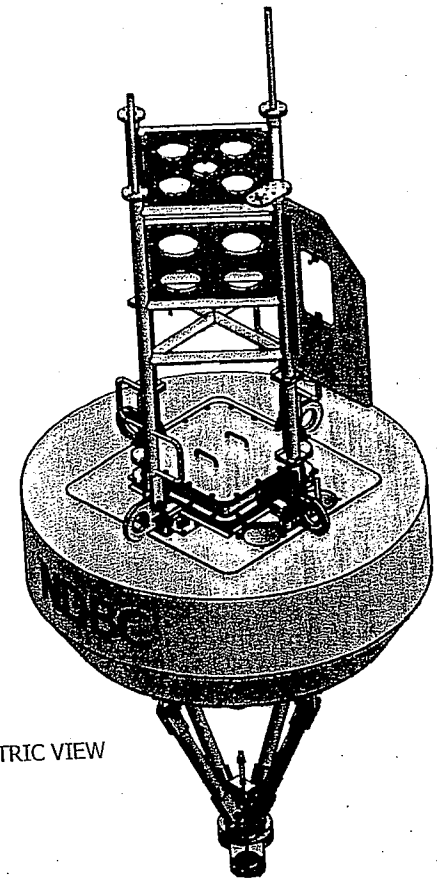

ISOMETRIC VIEW

ITEM	QTY	PART NUMBER	Control #	DESCRIPTION
3	1	02.3FB1300-001	NSN	2.3 METER STANDARD BUOY BRIDLE MECHANICAL ASSEMBLY
2	1	02.3FB1200-001	NSN	2.3 METER STANDARD BUOY MAST MECHANICAL ASSEMBLY
1	1	02.3FB1100-001	NSN	2.3 METER STANDARD BUOY HULL MECHANICAL ASSEMBLY

Parts List

UNLESS OTHERWISE SPECIFIED:
DIMENSIONS ARE IN INCHES
TOLERANCES
DECIMALS .XX +/- .05 .XXX +/-.010
ANGULAR +/- .5
DO NOT SCALE DRAWING

DRAWN	chuckc	10/24/2007
CHECKED		
QA		
MFG		
APPROVED		

NATIONAL DATA BUOY CENTER
John C. Stennis Space Center
Stennis Space Center, Mississippi,39529

TITLE
2.3 METER STD BUOY MECHANICAL SYSTEM ASSEMBLY

SIZE C | DWG NO 02.3FB1000 | REV
SCALE | SHEET 1 OF 4

2.3 METER STD BUOY MECHANICAL SYSTEM ASSEMBLY -001
WEATHER CONFIGURATION (WEAH)

9.0 QUALIFICATION REQUIREMENTS

9.1 QUALIFICATION OF WELDERS

When welder certification is required by the fabrication/repair directive, all welding will be performed by qualified welders holding currently valid certificates in accordance with MIL-STD-248. This military standard accepts the welding procedure qualifications of the U.S. Coast Guard, the American Society of Mechanical Engineers, the American Bureau of Shipping, as well as other U.S. Government agencies provided that the procedure meets the minimum requirements of MIL-STD-248. Welders will be experienced in the type of welding to which they are assigned in production, and will be so certified.

9.2 NONDESTRUCTIVE TESTING QUALIFICATIONS

All nondestructive testing of metals will be accomplished in accordance with MIL-STD-271. All nondestructive testing personnel performing eddy current, magnetic particle, radiographic, and ultrasonic methods will be qualified and certified in accordance with MIL-STD-410. Personnel performing liquid penetrant inspection will be certified in accordance with MIL-STD-410 if so required by the fabrication/repair directive.

10.0 INSPECTION

Quality assurance inspections will be performed during fabrication to assure compliance with alignment and fit-up quality of joint preparation and to assure free welding access to the joints. Cut edges to be welded will be completely free of slag, dirt, and grease and will be determined to be suitably spaced before welding.

All completed welds will be subjected to a visual inspection. This includes each pass of a multiple pass weld. NAVSEA 0900-LP-003-8000, "Surface Inspection Acceptance Standards for Metals," will be used as the acceptance standards.

All welds in watertight boundaries will be subjected to an air test.

Liquid penetrant, magnaflux, radiographic, or ultrasonic inspection of welds is not required except as specifically called out in the Detail Specification Fabrication Document or other appropriate authority. When radiographic or ultrasonic inspection is required, such will be carried out in accordance with the American Bureau of Shipping, "Rules for Nondestructive Inspection of Hull Welds."

All weld defects beyond inspection limits will be removed by mechanical means, air arc gouging, scarfing, or grinding, after which the defective area will be rewelded.

All tests and inspections are to be completed before the application of coatings.

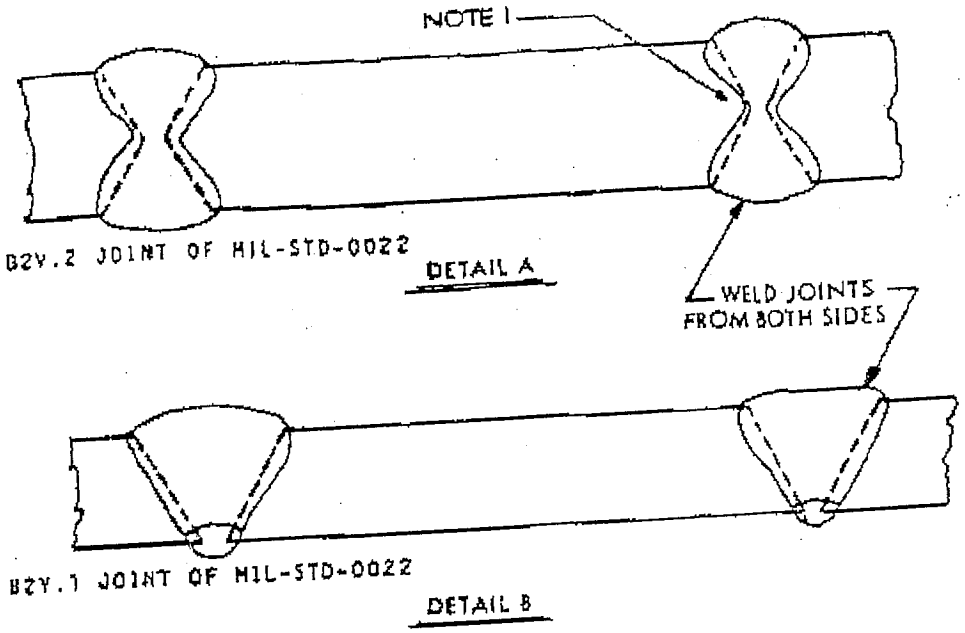

NOTES: (1) DEPTH OF GROOVES MAY VARY WITH RESPECT TO EACH OTHER. THE ROOT HOWEVER, MUST BE WITHIN THE CENTER 1/3 THICKNESS OF PLATE

(2) MULTIPLE PASS WELDS SHALL BE USED. WELD JOINTS FROM BOTH SIDES.

(3) EITHER SIDE MAY BE THE PRESSURE SIDE.

(4) GOUGE, CHIP, OR GRIND ROOT OF WELD TO SOUND METAL PRIOR TO WELDING OPPOSITE SIDE.

(5) AS AN ALTERNATE METHOD, PLATES AND SHAPES 1-1/2 INCH AND LESS IN THICKNESS MAY BE BEVELED APPROXIMATELY 2/3 THE THICKNESS OF THE PLATE OR SHAPE FROM ONE SIDE BEFORE WELDING. THE BEVEL ON THE OPPOSITE SIDE WILL BE OBTAINED BY BACKGOUGING THE ROOT OF THE WELD APPROXIMATELY HALF THE THICKNESS OF THE PLATE OF SHAPE AS SHOWN IN DETAIL C BELOW.

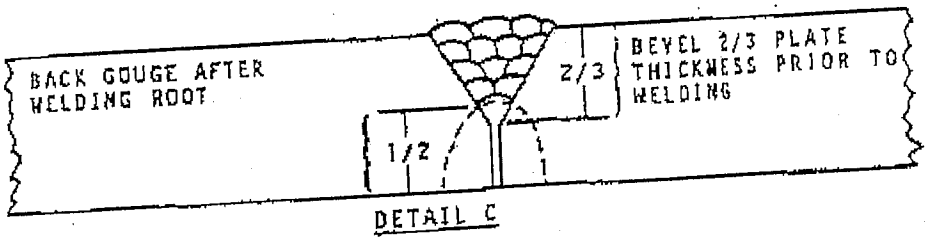

Figure 5. Methods of Welding Insert Plates

Small round patches, 2 feet in diameter or less, will be dished $^{1}/_{16}$ inch to c inch to provide for anticipated shrinkage. Peening may be employed in conjunction with or in lieu of dishing in plating d-inch thick or greater. Block welding sequences will be used to reduce weld metal cracking.

Plate edges will be bevelled to form an included angle of 60 degrees. Root openings will not be less than $^{1}/_{16}$ inch. Configuration and fit up will be as specified in Figure 5.

Access holes will be the minimum size necessary and no more than two holes will be allowed in a compartment or tank.

8.0 QUALITY ASSURANCE

8.1 MATERIAL REQUIREMENTS AND CERTIFICATION

Ordering and purchasing of materials will be in accordance with the latest military, federal, Joint Army-Navy (JAN), or industry specification (as applicable for intended service) indicated in mandatory reference documents, technical manuals, drawings, or other instructions. Material from the Federal Stock System, identified by the proper stock number, will be considered to conform to the latest specifications.

8.2 WELDING MATERIALS CONTROL

Filler metals will be of the type recommended by the American Welding Society (AWS) Welding Handbook, latest edition or American Society for Testing and Materials (ASTM) Standards for the base metal involved.

Electrodes require special handling and maintenance procedures as specified in the applicable fabrication document. Control of electrode exposure time, baking, issue, and storage will be in accordance with a written approved procedure.

Welding wire packages should remain unopened until ready to be used and should be used as soon as possible after removal from the package. Spools of wire should be protected by a cover during use.

Any welding or brazing materials that have lost their identification will not be used.

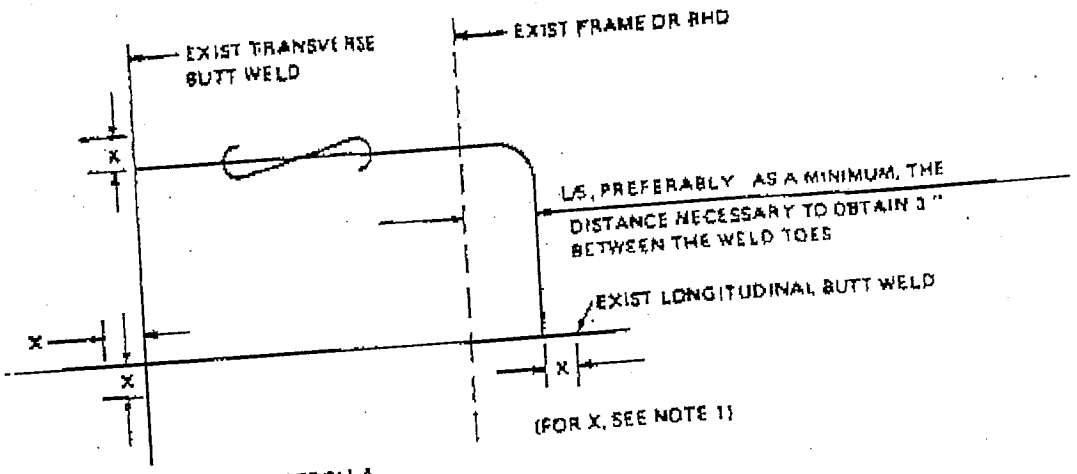

SKETCH A

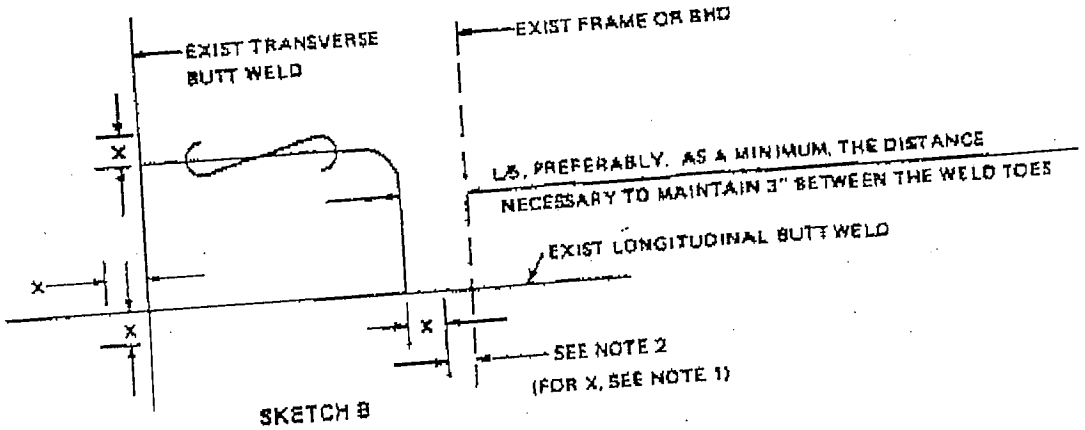

SKETCH B

NOTES:
1. X EQUALS CUT-BACK OF 3" MINIMUM.
2. THE 3" REMOVAL OF LONGITUDINAL BUTT WELDS MAY BE REDUCED WHEN THE CUT-BACK WILL RESULT IN CROSSING A FRAME OR OTHER STRUCTURAL MEMBER, OR WILL RESULT IN LESS THAN 2" OF WELD BETWEEN THE CUT-BACK AND THE STRUCTURAL MEMBER. IN NO CASE HOWEVER, SHALL THE CUT-BACK BE LESS THAN 2" UNLESS OTHERWISE APPROVED.
3. L EQUALS DISTANCE BETWEEN FRAMES.

Figure 4. Example of Boundary Location for Welded Patch Installation

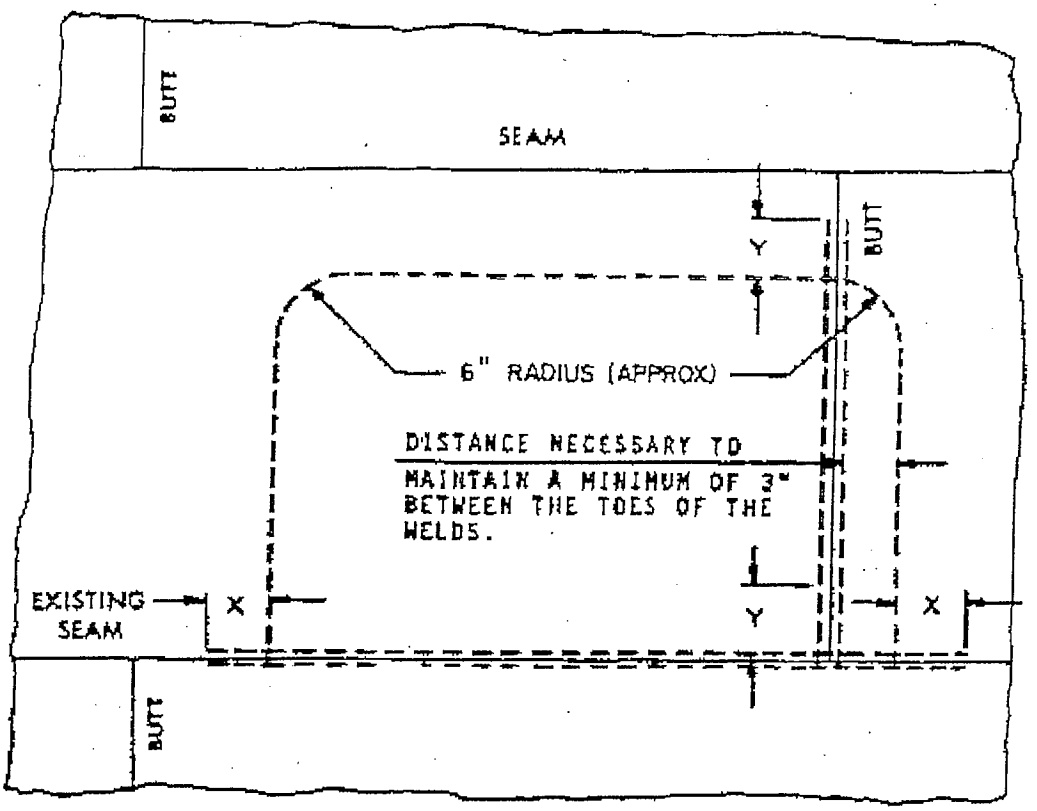

X = REMOVE EXISTING WELDS A MINIMUM OF 3 INCHES BEYOND ACCESS HOLE.

Y = NO WELD REMOVAL REQUIRED

Figure 3. Welded Construction — Example of Access Hole Which Intersects Existing Welds

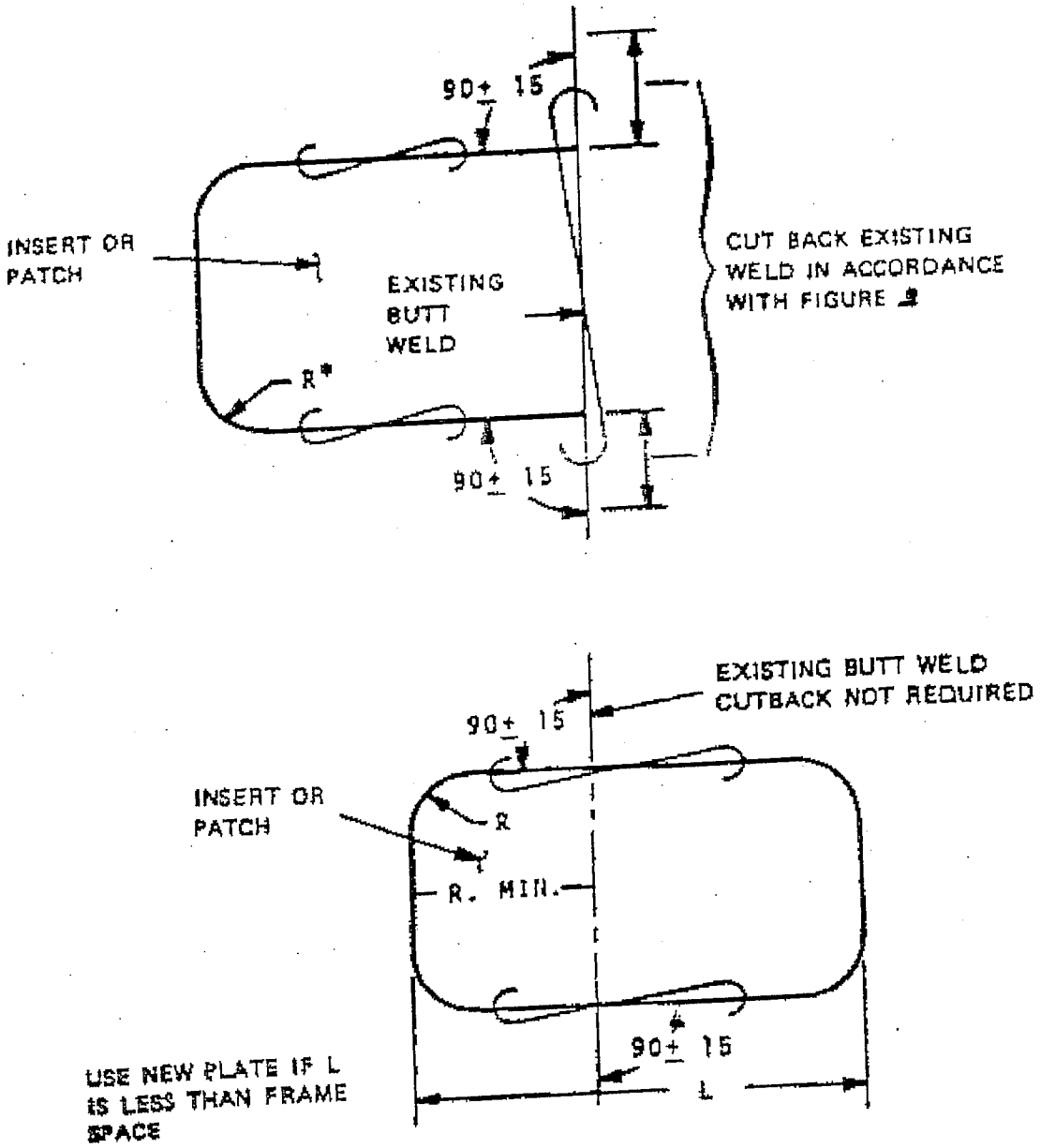

Figure 2. Inserts or Patches Which Land On or Cross Existing Butt Welds

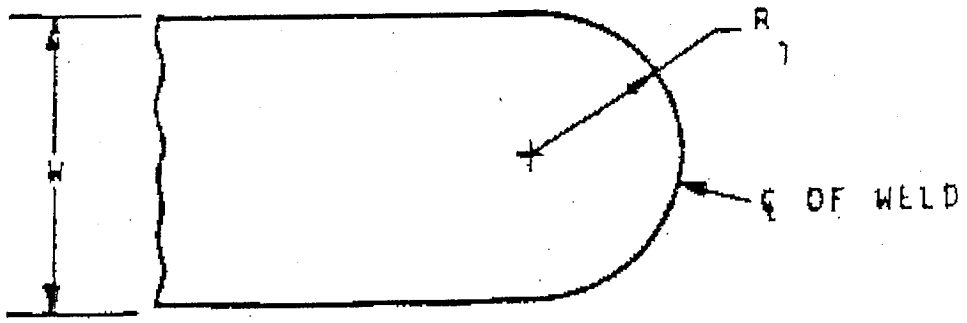

WHEN "W" = 6" MIN., 12" MAX.

THEN $R_1 = \frac{W}{2}$

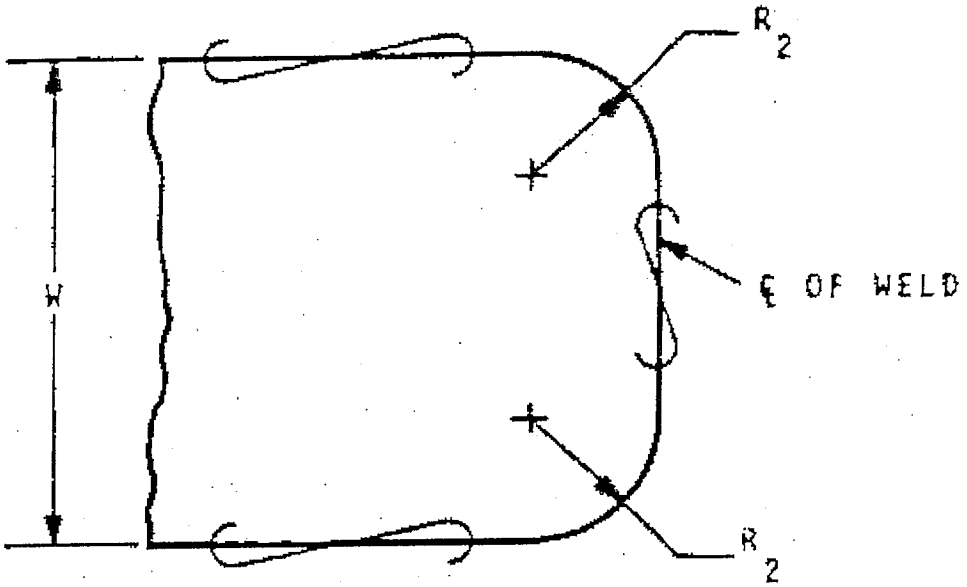

WHEN "W"> 12" OR 4T, WHICHEVER IS LARGER

THEN R_2 = 6" OR 2T WHICHEVER IS LARGER

Figure 1. Radius Corners of Inserts and Patches

d. If a crack crosses stiffeners, frames, or girders, the welds connecting these members to the plating will be removed a distance of at least 6 inches on each side of the crack before welding the crack. After welding the crack, restore the seams in kind.

e. After ensuring that the crack has been completely removed, weld the evacuated area to the original thickness. Areas that extend completely through the member will be welded from both sides, after back chipping.

7.4 HOLES

Partial and full penetration holes will have a minimum 20• vee before repair. Full penetration holes will be repaired using a backing plate and then backgouging to one-third plate thickness or d inch, whichever is less, and welding from the other side. Holes more than 2 inches in diameter will be inserted by a 6-inch-diameter patch.

7.5 ACCESS OPENINGS

Unless authorized by the applicable detail specification, fabrication document, or by the Contracting Officer, no access openings will be cut in the hull, deck, or bulkhead. When authorized, comply with the following requirements and guidelines regarding layout, cutting, and restoring the access openings.

No cuts will be made in sheer, stringer, or bilge strakes or in the flat keel unless otherwise authorized.

Margin plates welded into structural plates will have a minimum width of 6 inches. Patches will have a minimum dimension of 12 inches when rectangular. For round patches, the minimum diameter will be 4T (where T equals the thickness of the involved structural member), but not less than 4 inches.

The boundaries of access openings will land on existing butts or seams wherever possible. Corners of access openings will have a minimum radius as shown in Figure 1, except when a boundary lands on an existing hull longitudinal or transverse butt weld. In the latter instance, the corners will intersect the butt weld at a 90-degree angle (see Figure 2). The existing butt weld will be removed and rewelded as shown in Figures 3 and 4.

Boundaries of access openings will be located between principal framing or bulkheads as shown in Figure 4.

c. Unless otherwise authorized in the Detail Specification Fabrication Document, all replacement material will be of the same alloy, shape, and size as the original. Restore attachment welds of various structural members to the original configuration.

d. Multiple passes will be used when making repair welds.

7.2 DOUBLER PLATES

Doubler plates are not normally authorized as permanent repairs, but may be specified for temporary repairs, for reinforcement, or for use in nonstrength areas. The corners of all doubler plates will be tapered and well rounded. Plug welding in the body of the doubler may be used.

7.3 CRACKS

Since cracks in structures normally occur in localized high stress areas, repairs should not be limited simply to welding up the cracks. Determining the cause of the crack and proper corrective action must also be considered part of the repair.

Generally, the preferred method of repair is to crop out and renew the affected areas. However, conditions will occur where weld repair is acceptable. When weld repair is authorized, the following procedures will be used:

a. Locate the ends of the crack. Approximately two-plate thicknesses beyond the ends, drill stress relief holes to prevent crack extension. The diameter of the holes should be about the same as the plate thickness.

b. "V" out the crack by chipping, grinding, or gouging to an acceptable edge preparation for the welding plate of the particular thickness. Conduct a magnetic particle inspection or dye penetrant of the crack, from both sides, to ensure complete removal of the crack before welding. Include the area around the drilled holes to ensure the crack does not extend past the holes.

c. After removal of the crack, do not draw the edges of the plate together to correct a root opening that is too wide. Instead, build up the groove with small weld beads until a proper root opening is obtained, or use a backing strip. If used, the backing strip must be removed after welding, followed by back chipping and welding.

All welding surfaces should be dried before welding. All back-up straps should be cleaned before placement on the joint.

6.10.2 Process

All welding of aluminum will be performed by either the gas tungsten-arc welding (GTAW-TIG) or gas metal-arc welding (GMAW-MIG) process.

6.10.3 Filler Metal

The contractor will designate, subject to the contract office approval, the filler metal alloy to be used with each base metal or combinations of base metals. Welding filler metals will conform to applicable recommendations and specifications of the American Welding Society for welding the base metals involved. Recommended filler metals for various aluminum alloys are as follows:

Table of Recommended Filler Metals for Various Aluminum Alloys

Aluminum Alloy Base Metal	Filler Metal	
	Preferred	Acceptable
5086	ER 5356	ER 5183/ER 5556
5456	ER 5556	ER 5356/ER 5183
6061	ER 4043	ER 5183/ER 5336

7.0 REPAIR PROCEDURES

7.1 CROPPING AND RENEWAL

When necessary to repair damaged or deteriorated structural members, the following method is specified:

a. When hull, bulkhead, or deck plate renewal is involved, all provisions contained in Section 9.5 for access openings will apply.

b. In the case of shapes and bars, crop out the deteriorated sections and install new sections, ensuring good alignment and fit up to adjoining portions.

6.9.3 Electrodes

The electrodes used in the welding process will be a type suitable for the parent metals as approved by regulatory bodies of the U.S. Coast Guard, American Bureau of Shipping, U.S. Navy, or as specifically required within the Detail Specifications. Manual shielded metal arc electrodes will be stored in a dry storeroom. Low hydrogen-type electrodes should be stored and handled to prevent absorption of moisture into the coating. Where dissimilar steels are to be welded, the steel with the higher alloy content will, in general, govern the procedure and electrode to be used. Tack welds will be made with the same grade electrode as the final weld, will be of the same quality, and will be deposited so as to facilitate incorporation in the final weld.

6.10 ALUMINUM STRUCTURE

Welding and allied processes and procedures used in the fabrication, construction, modification, or repair of aluminum buoy structures will meet the requirements of Rules for Building and Classing Aluminum Vessels, ABS Section 30.

6.10.1 Surface Preparation

Aluminum and its alloys rapidly develop an oxide surface film upon exposure to air. The oxide has a melting point in excess of 3600 • F or approximately 2000 • F above the melting point of pure aluminum. This means the aluminum melts before the oxide film preventing fusion between the filler metal and its base plate. The oxide film must be removed before welding. Surfaces free of oil, grease, moisture, and dust are required for welding.

Cleaning of surfaces to be welded should be performed just before welding. The elapsed time between cleaning and welding aluminum will not exceed 8 hours. Some general cleaning procedures are given as follows:

Cleaning Procedures

Compounds Removed	Type of Cleaning — Welding Surfaces Only
Oxides (use any method listed)	Remove mechanically, preferably with stainless wire brush; alternatively may use file or grinder. Use no lubricant. Dip edges in strong alkaline solution, then water, then nitric acid. Finish with water rinse.
Oil, grease, moisture, dust (use any method listed)	Wipe with hydrocarbon solvent such as acetone or alcohol. Wipe with proprietary solvents. Dip edges using any of the above.

6.7 JOINT DESIGN

All joints to be welded will be designed and assembled in a manner providing access to the entire weld area and permitting penetration to the root of the joint. Weld forms, sizes, definitions, and welding symbols will conform to MIL-STD-22, Welded Joint Design.

6.8 FILLET WELDS

Fillet weld sizes will not exceed sizes indicated on the contract plans by more than $^{1}/_{16}$ inch for welds up to d inch and c inch for welds d inch or larger. The sizes will in no case be less than the sizes specified, except that for a total length not exceeding ¼ of the joint's length nor more than 6 inches in any one continuous location the weld size may be one size smaller than specified. Where the size of a fillet weld is not shown on the contract plans, its nominal sizes will be equal to the thickness of the thinner member in the joint. Reinforcements of groove welds will not exceed $^{1}/_{16}$ inch. The face of the weld will merge smoothly with the base metal. Undercut will not exceed $^{1}/_{64}$ inch. Excess weld metal and weld splatter will be removed by grinding.

6.9 MILD STEEL STRUCTURE

6.9.1 Surface Preparation

All surfaces to be welded will be free from moisture, grease, loose mill scale, excessive rust or paint, or other foreign matter. A thin coating of linseed oil need not be removed before welding, but slag and scale will be removed, not only from the edges to be welded, but also from each pass or layer before the deposition of subsequent passes or layers.

6.9.2 Equipment

Manual, semi-automatic, machine, or automatic welding equipment is permitted provided that the selected equipment produces satisfactory welds under production conditions using approved filler metals. The manual shielded metal arc process may be used for welding with mild steel electrodes and where joint design will permit sound welds. Other welding processes and filler metals may be used, subject to procedure qualification.

gouged to sound metal before welding the second side of the joint. Welds will be extended around ends of members to form closed loops.

6.2 STRIKING AN ARC

The striking of an arc on any principal hull or deckplate is prohibited, unless the plate surface on which the arc is struck is to be incorporated in a welded joint. Marks left by an accidental striking of an arc will be ground out to a smooth contour, taking care that the plate thickness is not reduced more than 10 percent.

6.3 EDGE PREPARATION

Edge preparation will be accurate and uniform, and the parts to be welded will be fitted as prescribed in Section 30 of ABS Rules for Building and Classing Steel Vessels. Cut edges of plate will not contain gouges or irregularities unsuitable for rewelding. These edges will have scale slag removed by mechanical means before further fabrication or use.

6.4 TACK WELDS

Tack welds of consistently good quality, made with the same grade of electrode and deposited in such a manner as not to interfere with the completion of the final weld, need not be chipped out provided they are found upon examination to be thoroughly cleaned and free from cracks and/or other defects.

6.5 SYMMETRICAL WELDING

Welding is to progress symmetrically so that shrinkage will be equalized on both sides of the structure. Intersecting systems of framing and stiffeners will be welded to each other before they are welded to the plating. Welds are not to be carried across an unwelded joint or beyond an unwelded joint that terminates at the joint being welded.

6.6 FINISHING WELDS

Finished welds will be sound, thoroughly fused throughout and to the base metal. Weld craters will be filled to at least weld size.

in conformance with the procurement specification requirements. Certification of conformance will be submitted in writing, properly signed by the manufacturer's representative.

5.3 FABRICATION DOCUMENT

The fabrication document is the document invoked by the contracts, purchase orders, or other requirements that govern work being accomplished.

5.4 WELDING TERMINOLOGY

Terms related to welding will be in accordance with American Welding Society Terms and Definitions, American Welding Society Publication, AWS A3.0.

6.0 WELDING PROCEDURE

6.1 GENERAL

Welding will not normally be permitted while the buoy is waterborne. If it is necessary to weld while the buoy is waterborne, welding will be permitted only when welding leads are properly grounded. Welding machines and other welding power sources will have both cables connected only to the buoy where welding is done. The return ground cable will be fully insulated and not permitted to drop overboard into the water. Two ground leads, separated to the maximum extent practical, will be used. The total cross-sectional area of the return ground cable will be at least one million circular mills per 1,000 amperes per 100 feet. The ground cables will be securely fastened to grounding plates or an integral part of the buoy with contact areas thoroughly cleaned to bare metal.

Proper precautions will be taken by the contractor to ensure that all welding will be done under protection from the deleterious effects of moisture and wind. All welding will have a regular and uniform surface with a minimum reinforcement and will be free from injurious defects, especially overlap, undercut, and gas pockets or porosity. All welds will be 100 percent efficient, full penetration for shell plating, deck, bulkheads, supporting structures, floors, and foundations. Welding procedures (direction, length, number, and sequence of beads) will be carefully planned as to minimize locked-up stresses. Where a joint requires welding from both sides to provide for complete fusion, the root of the weld deposited first will be chipped, ground, or arc-air

3.4 QUALITY RESPONSIBILITY

The contractor will take the necessary steps to assure that the welding and inspection requirements as indicated on the fabrication document(s) are satisfied. The Government reserves the right to witness or to repeat testing and inspections or to perform any additional testing to assure compliance with all fabrication requirements.

4.0 REFERENCES

a. MIL-STD-248, Welding and Brazing Procedure and Performance Qualification

b. Rules for Nondestructive Inspection of Hull Welds, ABS, 1975

c. American Welding Society (AWS) Welding Handbook, 1981

d. MIL-STD-410, Qualification of Inspection Personnel (Magnetic Particle and Penetrant)

e. AWS A2.4, Symbols for Welding and Nondestructive Testing

f. AWS A3.0, American Welding Society Definitions: Terms and Definitions

g. MIL-STD-22, Welded Joint Design

h. MIL-STD-271, Nondestructive Testing Requirements for Metals

i. NAVSEA 0900-LP-003-8000, Surface Inspection Acceptance Standards for Metals (includes MT, PT, and visual inspection)

j. Rules for Building and Classing Steel Vessels, ABS, Section 30

k. Rules for Building and Classing Aluminum Vessels, ABS, Section 30.

5.0 DEFINITIONS

5.1 APPROVAL (APPROVED)

The item under consideration requires formal acceptance by the Contracting Officer or his/her authorized direct representative.

5.2 CERTIFICATION

Certification indicates that the item under consideration has been tested by the manufacturer or that on receipt, inspection tests were conducted by an authorized agency, and that the item has been verified to be

1.0 PURPOSE

This specification establishes the minimum requirements and provides guidance for welding and inspection in the fabrication, modification, or repair of buoy structures and applies to all activities performing such functions for the National Data Buoy Center (NDBC).

2.0 OBJECTIVE

To maintain the integrity of the buoy structure and systems when welding is performed, it is essential and mandatory to maintain full compliance with the requirements specified, including those of other documents that form a part of this specification by reference.

3.0 SCOPE

This instruction applies to all NDBC and NTSC personnel.

3.1 ENGINEERING RESPONSIBILITY

On the fabrication document(s), the responsible engineer will specify and the designer will designate the appropriate welding standard(s) including the welding process and the appropriate inspection class in accordance with AWS A2.4, Symbols for Welding and Nondestructive Testing.

3.2 TECHNICAL DATA REPOSITORY (TDR) RESPONSIBILITY

The TDR of the NDBC is the repository for all NDBC standards, procedures, and specifications and will provide documents to users.

3.3 FABRICATOR RESPONSIBILITY

The fabricator will perform all work in accordance with the specified procedures, drawings, and specifications.

REVISIONS			
REV.	DESCRIPTION	DATE	APPROVED
A	REPLACED REV. – IN ITS ENTIRETY PER ECR-2551. THE REPLACEMENT BRINGS REV. A UP TO CURRENT STANDARDS.	10/27/92	M. WALZ
B	ECR R99-0057	10/26/99	C. KOHLER

PROCEDURE: NDBC-8031
DATE:

NDBC STANDARD SPECIFICATION FOR

WELDING AND REPAIR PROCESSES

SYSTEMS ENGINEER	10/26/99 DATE
PROGRAM MANAGER	10/26/99 DATE
OPERATIONS DIVISION CHIEF	11/17/99 DATE
DATA SYSTEMS CHIEF	11/22/99 DATE
QUALITY ASSURANCE REP.	11/22/99 DATE
ENGINEERING DIVISION CHIEF	11/23/99 DATE

NATIONAL DATA BUOY CENTER
JOHN C. STENNIS SPACE CENTER
STENNIS SPACE CENTER, MISSISSIPPI 39529-6000

6.0 HULL AND SUPERSTRUCTURE

The hull, mast, and mooring bridle/yoke shall be constructed and assembled in accordance with accompanying drawings. The Contractor shall be responsible for the integrity of all watertight joints. Where not specifically addressed on the drawings, framing and other shell attachments shall be scalloped in the way of seams and butts.

7.0 ACCESS FITTINGS

All edge or butt surfaces on the buoy which are intended to bear against a rubber or rubber-like gasket in order to effect a seal shall be machined smooth and true, and their edges shall be rounded to prevent cutting, scratching, or gouging of the gasket material. These surfaces shall be protected from damage during construction.

All hatch covers shall be watertight and, where specified by the drawings, hooks or latches shall be provided to lock the hatch covers firmly in the open position.

The coaming edges and the gasket surfaces shall be unpainted. The coaming edges shall be protected with silicone grease or other similar substance.

The Government reserves the right to inspect and observe all fabrication, testing, and inspection, and to perform additional nondestructive testing as deemed necessary of any buoys and components constructed under this specification.

3.3 MATERIALS

The Contractor shall establish and maintain a system of material identification which ensures the use of the materials and components called for by the drawings and specifications. The Contractor shall, upon request of the Government, furnish samples of the material and information concerning their quality and use. Materials which have been inspected and passed shall not be diverted from their intended purpose without authorization from the Contracting Officer.

When received at the construction yard, all materials and equipment shall be marked by the Contractor for identification to be used only for the applicable contract and installed or stowed as appropriate. Stowage shall be in an area separated from materials for other yard activities.

4.0 WELDING PROCESSES

Welding processes and procedures used in the fabrication and construction of buoy structures, whether manufactured or purchased by the Contractor, shall meet the requirements and quality assurance provisions of NDBC-8031.

5.0 SUPERVISION

A qualified welding engineer and an experienced production supervisor shall be employed by the Contractor and they shall technically direct and closely supervise and control fabrication and welding operations to assure conformance with the requirements of this document, with the approved working plans, and with NDBC-8031.

Shell and deck plating must be fair, closely fitted, and shall be free of buckles, or uneven sight edges. Special care shall be used in aligning and fairing of surfaces. All formed plates and shapes shall be smoothly formed, true to required alignment, shape, or curvature, and where flanges are used for attachments, the faying edges shall be free from hollows and correctly beveled as required. Shims or other filler pieces shall not be used to correct improper fit. Care shall be exercised in welding to keep warpage and distortion to a minimum. No fairing cement shall be used.

Plate edges shall be neatly and accurately cut with clean welding edges. All edges exposed to personnel or weather shall be dressed or ground to a smooth generous radius to avoid injury to servicing personnel and to facilitate maintenance.

Unfairness of plating, such as decks and shell plates, shall not exceed 0.100 inch per foot in any direction.

3.0 QUALITY ASSURANCE PROVISIONS

3.1 QUALITY ASSURANCE PROGRAM

The Contractor shall develop, implement, and maintain a Quality Assurance Program (QAP). The QAP shall meet or exceed the requirements of MIL-I-45208, "Inspection System Requirements," and shall be in accordance with Government-supplied drawings, specifications, and the Statement of Work. The QAP shall include the Contractor's methods and procedures for quality control, in-process inspection, documentation control, and configuration control.

3.2 GOVERNMENT INSPECTIONS

The work and materials to be furnished will be inspected by a representative or representatives of the Government Contracting Officer. The representative(s) will be referred to herein as the Inspector. The Inspector shall, at any mutually agreeable time arranged with advance notice, have the right to visit the administrative, design, and/or manufacturing facilities of the Contractor or any subcontractor to receive a briefing on, and to inspect, the progress to date. Provisions shall be made to accommodate the Inspector during these visits.

1.4 PROGRESS REPORTS

Progress reports shall be submitted monthly by the Contractor to the Contracting Officer. The report shall include, but shall not be limited to, the following:

a. The amount of actual work completed as a percentage of the work scheduled to be done under the CSP.

b. Any updates to the CSP.

c. Unanticipated technical or management problems and their proposed solutions.

d. Action required of the Government, including the required completion date of such action.

1.5 CARE OF THE BUOY DURING CONSTRUCTION

All parts of the buoy shall be maintained in a satisfactory condition during the entire period of construction, and all chips, shavings, refuse, dirt, and water shall be removed frequently. Voids shall be clean and must pass a quality assurance inspection before being closed. All foreign matter shall be removed from areas which are to be permanently covered or are otherwise inaccessible.

After satisfactory completion of the buoy's mandated acceptance testing, all refuse, dirt, water, and other foreign matter, including protective coverings used during construction and testing, shall be removed.

2.0 WORKMANSHIP ON BUOY

All workmanship shall be first class in all respects. Its quality shall conform with the best marine practices. Competent workmen, experienced in marine construction, shall be employed under supervision adequate to assure first class workmanship throughout. Any unsatisfactory work, whether partially or entirely finished, shall be satisfactorily corrected without extra cost to the Government.

Dimensional tolerance, fit, alignment, fairness, and finish shall be in accordance with working plans or as specified in control specifications.

1.0 GENERAL REQUIREMENTS

1.1 INTRODUCTION

The Contractor shall provide the necessary plant, tools, labor, and materials to build and test the buoy in accordance with the furnished plans and specifications contained herewith, including all requirements for upkeep of the buoy until acceptance.

1.2 DEFINITIONS

Where the words "approval" or "specifically approved" are used in this specification, the approving authority shall be the Contracting Officer or his representative.

The Contractor shall not be permitted to make substitutes of any specified material or equipment without requesting and receiving approval of the Contracting Officer. Any request of this nature shall be accompanied by a description of the substitute with supporting data sufficient to permit a determination of the suitability of the proposed substitute.

In the approval or rejection of a proposed substitute, the decision of the Contracting Officer is final.

Unless a specific edition is referenced, all specifications, standards, drawings, etc., are to be the latest edition available at the time of release of the procurement request.

1.3 CONSTRUCTION PLAN

The Contractor shall submit for approval a Construction Sequence Plan (CSP) for fabrication of the full series of contracted buoys and components. The CSP shall be based on and in conformance with the construction drawings and specifications provided by the Government, and follow the scheduling requirements given in the Statement of Work. The CSP shall follow all the quality assurance provisions of Section 3.0.

REVISIONS			
REV.	DESCRIPTION	DATE	APPROVED
A	Amendment to OE-5028	6/1/82	L. Ladner
B	Amendment to OE-5028 per ECR-933; expands the basic specification to include E-Buoy.	5/3/83	H. ?
C	Incorporates ECR-1258.	10/2/84	D. Smith
D	Incorporates ECR-1270 which improves readability and generalizes for aluminum hulls.	11/29/84	D. Scally
E	Incorporates ECR-1835	11/30/87	D. Scally
F	Revised per ECR-2549 and ECR-2549A.	9/29/92	M. Walz

PROCEDURE: OE-5028
DATE: MAY 13, 1981

NDBC STANDARD SPECIFICATION FOR

CONSTRUCTION OF ALUMINUM OCEAN BUOY STRUCTURES

PREPARED BY: T. Billy 13 MAY 1981
DATE

REVIEWED BY: L. J. Ladner
PROGRAM MANAGER DATE

REVIEWED BY: NOT APPLICABLE
OPERATIONS DATE

REVIEWED BY: Dan Patton 13 MAY 81
QUALITY ASSURANCE DATE

APPROVED BY: W. R. Dennis Jr. May 15, 1981
CHIEF, ENGINEERING DATE

NATIONAL DATA BUOY CENTER
JOHN C. STENNIS SPACE CENTER
STENNIS SPACE CENTER, MISSISSIPPI 39529-6000

Approval Section			
OVERALL EVALUATION: PASS / FAIL			
Test Conductor:		Date:	
Safety Observer:		Date:	
NTSC QA:		Date:	

8.0 DATA SHEET

2.3-Meter Structural Frame Load Test

8.1 Test Date _____
Task Order/Contract Number _____ Test Location _____
Dynamometer S/N _____ Rating _____ Cal. Exp Date _____
Safety Sling S/N _____ Cal. Exp Date _____
Bridle Ring / Leg Serial Number _____, Stamp Date _____

8.2 Pretest/Inspection (Visual) Results/Comments.

_____

8.3 Safety Observer's Authorization to

Proceed. _____

8.4

0 Degree Eye Condition				Dynamometer Reading (lbs)
2.3-Meter Buoy Frame		Mooring Eye Attachment		
New	Refurb	New	Refurb	

90 Degree Eye Condition				Dynamometer Reading (lbs)
2.3-Meter Buoy Frame		Mooring Eye Attachment		
New	Refurb	New	Refurb	

180 Degree Eye Condition				Dynamometer Reading (lbs)
2.3-Meter Buoy Frame		Mooring Eye Attachment		
New	Refurb	New	Refurb	

270 Degree Eye Condition				Dynamometer Reading (lbs)
2.3-Meter Buoy Frame		Mooring Eye Attachment		
New	Refurb	New	Refurb	

Post-Test Inspection (Visual)

Results/Comments _____

This data shall be placed in the Buoy Log book.

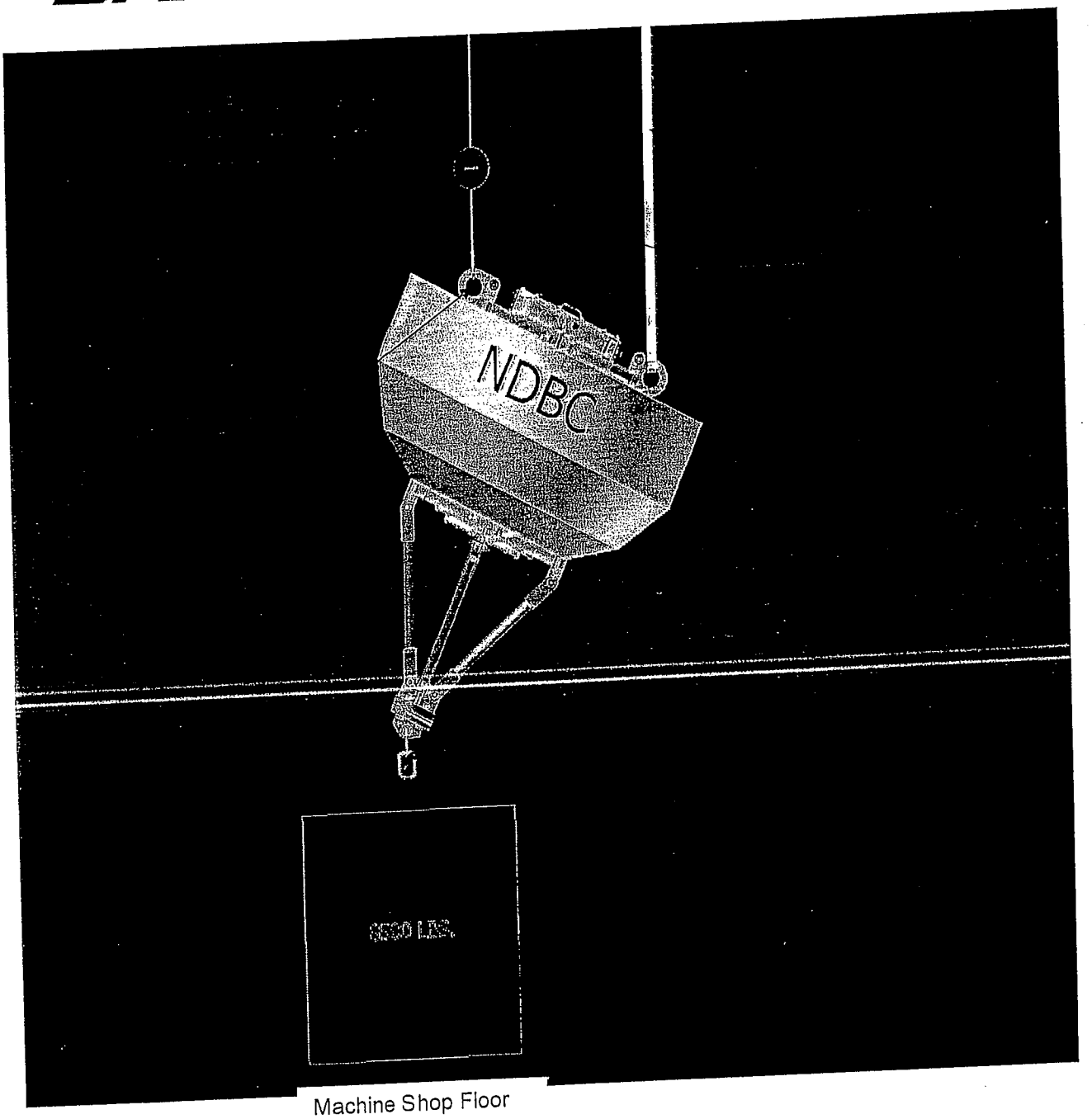

Machine Shop Floor

7.11 Slowly relieve the loading and visually inspect the lifting eye and attachment test areas for bends, cracks, or other deformation.

7.12 Repeat the load test on the other (3ea.) pad eyes as previously noted.

7.13 Slowly relieve the loading and visually inspect the other lifting eyes and attachment test areas for bends, cracks, or other deformation.

7.14 Announce "Test Complete" on the PA system.

7.15 Dissemble the test setup and the mooring attachment assembly. Inspect eyes and bushings on the bottom of the buoy hull and bridle.

7.16 Complete the data sheet and present to Quality Assurance for verification /acceptance.

7.0 INSTRUCTIONS

The following procedure shall be followed in conducting the test:

7.1 Fill out the administrative section of the data sheet.

7.2 Visually inspect the lifting eye and immediate surrounding area for pretest conditions. Perform standard visual inspection of all welds and enter comments on the data sheet for and discrepancies.

7.3 Assemble 2.3-meter assembly test, equipment, materials, and rig test apparatus per Figure 1. Rig the main lifting block to the mooring eye. Attach a secondary sling to insure that the 2.3-meter assembly will remain under control if a main lifting catastrophic failure occurs. The slack of the secondary rigging must be maintained at a minimum to reduce the static shock loading.

7.4 Inspect each test setup in the no slack, no-load condition and insure the correct alignment of test fixtures, gauge readability, shackles lock pin installation, etc.

7.5 Immediately before application of load, the designated safety observer shall verify that all safety precautions have been complied with and shall so indicate by signature on the test data sheet.

7.6 Announce the test start on the PA system.

7.7 Slowly apply tension to the test bridle until the dynamometer reads 2000 pounds. IMMEDIATELY STOP AND REDUCE LOADING IF ANY DEFORMATION OF THE BUOY, EQUIPMENT OR ANY OTHER FAILURE IS OBSERVED.

7.8 Inspect the test setup for discrepancies before proceeding.

7.9 Slowly, increase tension until the mooring attachment has a dynamometer reading of 7,000 pounds. IMMEDIATELY STOP AND REDUCE LOADING IF ANY DEFORMATION OF THE BUOY, EQUIPMENT OR ANY OTHER FAILURE IS OBSERVED.

7.10 Enter the actual (maximum static) test load reading of the dynamometer of the data sheet. Maintain this load for five minutes before relieving the load & re-doing.

6.0 SAFETY

This test involves loading stress in materials and apparatus up to 7000 pounds. MATERIAL FAILURE COULD RESULT IN A CRUSHING WEIGHT OR FLYING OBJECTS THAT COULD DAMAGE EQUIPMENT AND/OR INJURE OR BE FATAL TO PERSONNEL. EXERCISE EXTREME CAUTION IN CONDUCTING THIS TEST!

The following safety precautions are a minimum that shall be observed:

a. Notify the Technical Services Contract Safety Officer (or local safety official if testing is performed away from NDBC) prior to conducting the test and identify a qualified individual who is not otherwise occupied with the test to serve as safety observer and verify compliance with safety procedures.

b. Ensure that all equipment and material involved in the test are in good condition and all gauges are in calibration.

c. Perform visual inspection of welds near the lifting eyes and mooring bridle ring.

d. Ensure that all apparatus rigging and attachments are secure and aligned in the no slack, no-load condition.

e. Ensure that the mooring ring is properly rigged, with a secondary lifting sling to control the load in case of a catastrophic failure of the main lifting device.

f. Properly rope-off or barricade all around a 50-foot radius of the test setup.

g. Announce via the public address system, no earlier that 5 minutes before the test, that "Personnel must remain clear of the lifting test area (identify) until test completion is announced."

h. Personal involved in the test are to wear safety shoes and hard hats and stay clear of the test while the load is applied, except as the test requires.

i. IMMEDIATELY STOP LIFT AND REDUCE LOADING IF ANY DEFORMATION OF THE BUOY OR EQUIPMENT IS OBSERVED DURING THE TEST.

1.0 PURPOSE

Testing described in this procedure will verify the structural integrity of the 2.3-meter frame assembly, for use in normal loads during deployment and recovery.

2.0 APPLICATION

This procedure is designed for structural testing only on the 2.3-meter buoy. The load should be applied with an overhead crane. Newly installed or refurbished eyes will be qualified by this procedure.

3.0 PREREQUSITIES

All welding and grinding shall be accomplished in accordance with the instructions in Procedure NDBC-8031. Outside surfaces of each lifting eye on the buoy and mooring bridle ring shall be suitable for inspection.

4.0 DISCUSSION

This structural test approximates 200% of the static mooring forces experienced during deployment and recovery at sea and ensures the structural integrity of materials and welds of the 2.3-meter frame. Such testing is designed to detect flaws, which could potentially result in structural failures, during operational handling.

5.0 EQUIPMENT REQURIED

- One dynamometer (0 to 15,000 pound range min.) in calibration with accuracy better that +/- 500 pounds actual.
- Minimum 1 ea. 8500 pounds of weight to sit on the machine shop floor. This will simulate 200% to the typical steady-state mooring load.
- Overhead Crane (10 ton min) with one lifting block, and a 10 (ton min) Shackle that attaches the overhead crane with the 2.3-meter structural frame padeye.
- One 10 (ton min) shackle to connect the mooring pad eye on the bridle of the frame, to the 8500 lb. weight on the shop floor.
- Safety sling capable of restraining the mooring ring incase of rigging failure.
- Tag lines as needed.

ACRONYMS AND ABBREVIATIONS

EFR.....Equipment Failure Report
ETP.....Engineering Test Plan/Procedure
NDBC.....National Data Buoy Center
NTSC.....NDBC Technical Services Contractor

Science Applications International Corporation
An Employee-Owned Company

Engineering Test Plan

ETP 08-027, Rev. -

TITLE: Structural Load Test Procedure for The 2.3 Meter NOOS Buoy			
NUMBER: 08-027, Rev. -	DATE: 05/07/2007	AUTHORIZED Task Order: TO-32, CLIN 5	SHEET: 1 OF 9
ORIGINATOR: Chuck Carpenter		NDBC KEY CONTACT: Brett Taft	PHONE: X 8-2807

ACTION AUTHORIZED:
TEST ONLY ☒ ADJUSTMENT G REWORK G MODIFICATION OTHER G

INSPECTION REQUIREMENT:
TEST ☒ NTSC QA ☒ NDBC G GOV. QA G

ITEM DESCRIPTION:
This is a procedure to test the structural assembly of the 2.3-meter NOOS buoy. The structural assembly will be subjected to a 7,000-pound load. Loading of the assembly, will be held for five minutes on each pad eye (4 ea.)

MANUFACTURER:	MODEL:	SERIAL NUMBER:	NDBC NUMBER:
SAIC / NDBC	Any	Any	N/A

PURPOSE:
See section 1.0 of the procedure.

SIGNATURES
(QA approval is required if QA is to inspect data sheet, NDBC approval is required if directed by Task Order)

ORIGINATOR: Chuck Carpenter	DATE: 05/07/08	QA REVIEW:	DATE:
ORIGINATOR'S SUPERVISOR:	DATE:	NDBC CONTACT:	DATE:

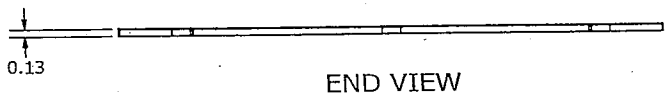

END VIEW

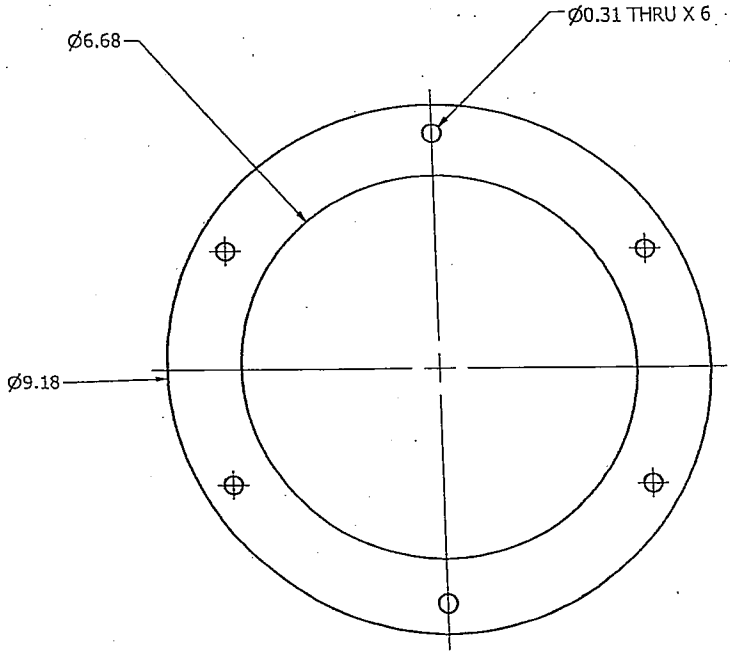

TOP VIEW
SCALE 1 / 2

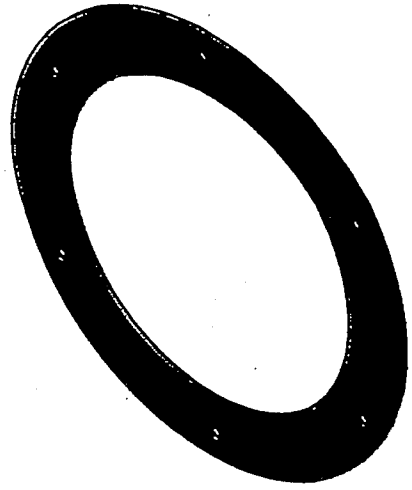

ISOMETRIC VIEW
SCALE 1 / 2

ITEM	QTY	PART NUMBER	DESCRIPTION	MATERIAL
1	1	Electronics Tube Gasket	.13 THK. X 10.00 DIA.	Rubber

Parts List

DRAWN T. RUTLEDGE	10/2/2007	NOAA NATIONAL DATA BUOY CENTER
CHECKED		TITLE
QA		TUBE ENCLOSURE GASKET
MFG		
APPROVED		SIZE B / DWG NO NDBC-X004 / REV
		SCALE / SHEET 1 OF 1

Science Applications International Corporation From Science to Solutions™	Document Number:	TMP-43
	Version Number:	1
	Issue Date:	18 August 2009

Technical Management Plan

Title:	NOOSS Standard Buoy Hull Production

THIS IS A CONTROLLED DOCUMENT

Unless issued by the TMP CM Lead with a control number noted in the blank below, any printed copies are considered uncontrolled.

The official repository for SAIC Task Management Plans is iNUN.

CONTROL NUMBER _____

ORIGINATOR:	Date Signed:
TASK ORDER MANAGER:	Date Signed:
PROGRAM MANAGER:	Date Signed:

SAIC PROPRIETARY

TECHNICAL MANAGEMENT PLAN

CHANGE PAGE

Version No.	Purpose of Change	Pages Effected	Issue Date	Instructions
1	Initial Issue	All	8/18/2009	Initial Document

TABLE OF CONTENTS

1.0 Overview 1
1.1 Scope/Statement of Work 1
1.2 Management Approach 2
1.3 Mitigation strategies: 3
1.4 Supporting Documents and References: 3
1.5 Assumptions and Deviations: 4
2.0 Implementation Plan 4
3.0 Performance Specifications and Metrics 4
4.0 Points of Contact 5
5.0 Deliverables/Activities 5
6.0 Cost Proposal 5
7.0 Payment Terms 5

National Oceanic and Atmospheric Administration Ocean Observing System (NOOS) NOOOS Standard Buoy Hull Production Task

PERIOD OF PERFORMANCE: **8-3-2009 to 3-31-2010**

TO TYPE: Firm Fixed Price (FFP)

1.0 Overview

1.1 Scope/Statement of Work

This Task Management Plan (TMP) addresses effort to fabricate, test and deliver the NDBC "Standard Buoy" that can be configured in three ways: (1) as a National Weather Service (NWS) "yellow" fleet data buoy; (2) as a Tropical Ocean Atmosphere (TAO) climate data buoy and (3) as a Deep-Ocean Assessment and Reporting of Tsunamis (DART™) data buoy. This effort will encompass the fabrication of the Standard Buoy system as requested by NDBC. Each complete buoy assembly will consist of one hull with tower and bridle (02.3FB1000-001), one upper well assembly and one lower/ADCP well assembly (02.3F01105), two tube enclosure cans and gaskets (NDBC-X002, NDBC-X004). SAIC will construct, test, and deliver a total of nine (9) buoys and buoy components in accordance with all applicable documents and the provisions in section 4.0 of the Statement of Work. No components or assemblies are to be painted. The scope of the Contractor Tasks encompasses the preparation and submission of a Construction Sequence Plan, a quality assurance program, actual fabrication and assembly, inspection and testing as indicated by applicable drawings and specifications, delivery of completed buoys and buoy components and delivery of all required documentation as it relates to drawings and procedures. Under this task order SAIC will complete the Standard Buoy drawing package to "Level A" that was started under a previous task order involving prototype development. All production modifications and drawing redlines will be captured during the initial production of the first two standard buoy assemblies. These changes will be incorporated into the final "Level A" drawing package. SAIC will complete development procedures for implementation of Standard Buoy power consumption, magnetic interference, equipment well air test, and ADCP well air test. In addition to those procedures SAIC will also complete development of the NDBC procedures for program interchangeability test, DART™ tube & GOES HDR tube functional verification, WxOPs – power system functional verification and weather & ocean field integration test (includes field blue-tag)

1.2 Management Approach

[redacted]

1.3 Mitigation strategies:

[redacted]

1.4 Supporting Documents and References:

The following drawings and specifications will be utilized in the fabrication, testing, inspection and final delivery of the buoy assembly:

Drawing Title	Dwg Number	Rev
2.3M Std Buoy Mechanical System Assembly (WEAH)	02.3FB1000-001	-
Upper Well Assembly	02.3F01105	-
Tube Enclosure Can	NDBC-X002	-
Tube Enclosure Gasket	NDBC-X004	-
Specification Title	**Spec Number**	**Rev**
Spec. for the Const. of Aluminum Ocean Body Structures	OE-5028	F
Welding and Repair Process	NDBC-8031	B
Inspection System Requirements	MIL-I-45208	A
2.3M Structural Load Test Procedure	SAIC-ETP-08-027	
SB Equipment Well Air Test	TBD	
SB ADCP Well Air Test	TBD	
SB ADCP Window Test	TBD	

NDBC-1000 *NDBC Standard Test Procedure for Preparing NDBC Test and Calibration Procedures*

1.5 Assumptions and Deviations:

[redacted]

2.0 Implementation Plan

A Construction Sequence Plan will be developed after award and submitted by September 1, 2009 as a Deliverable under this tasking.

3.0 Performance Specifications and Metrics

SAIC will perform this tasking in accordance with the SOW including the Engineering documentation.

SAIC proposes the following performance metrics for this task order:

- On-time deliverables per the Deliverables table
- Quality of deliverables are in accordance with NDBC SOW

- Acceptable procedures and drawings as reviewed and approved per NDBC's configuration management process

4.0 Points of Contact

[redacted]

5.0 Deliverables/Activities

Deliverables/Submittals	Due Date	Acceptance Criteria
Construction Sequence Plan	09/01/2009	Deliver to iNUN
NDBC Procedures for SB WxOPs Power Consumption, Magnetic Interference, Equipment Well Air Test, ADCP Well Air Test	11/05/2009	Deliver to iNUN
Fabrication of two (2) buoy systems	11/30/2009	QA Approval and NDBC Inspection
Standard Buoy Drawing Package	1/29/2010	Deliver to CM
Fabrication of three (3) buoy systems	01/29/2010	QA Approval and NDBC Inspection
NDBC Procedure for SB NDBC Program Interchangeability Test, DART Tube Functional Verification, GOES HDR Tube Functional Verification, WxOPs – Power System Functional Verification, Weather & Ocean Field Integration Test (Includes Field Blue-tag)	03/01/2010	Deliver to iNUN
Fabrication of four (4) buoy systems	03/31/2010	QA Approval and NDBC Inspection
Monthly Progress Report	Monthly	Deliver to iNUN

6.0 Cost Proposal

See attached cost proposal.

7.0 Payment Terms

Invoices shall be submitted upon completion of each SAIC accounting period. This consists of 12 equal payments over the 1 year of performance. Payment shall be made within 30 days.

Standard Buoy Construction Sequence Plan (CSP)

	Proposed Date to Start	Proposed Date to Complete	Cognizant
Order Subcontract material	8/24/2009	10/16/2009	Contracts
This Begins Production on Package 1 (2 Buoys)	10/19/2009	11/30/2009	Various
Conduct Quality assurance for Payload Tubes	10/19/2009	10/19/2009	QA
Fabricate Upper and Lower Weldments	10/20/2009	11/13/2009	OPS
Fabricate Mast	10/20/2009	11/6/2009	OPS
Fabrication of Lower Well Assembly	10/20/2009	10/30/2009	OPS
Fabrication of the Mooring Bridle	10/20/2009	11/6/2009	OPS
Buoy Components Fabrication	11/10/2009	11/13/2009	OPS
Tube Enclosure Can Integration	11/9/2009	11/9/2009	OPS
Request Hull from Inventory	11/13/2009	11/13/2009	OPS/Logistics
Integrate Buoy Hull	11/17/2009	11/20/2009	OPS
Conduct Quality Assurance	11/23/2009	11/25/2009	QA
Conduct watertight integrity test on Payload tubes	11/27/2009	11/29/2009	Eng/OPS
Deliver Payload Tubes and Gaskets to NDBC	11/30/2009	11/30/2009	OPS
Ensure engineering redlines/procedures captured	10/19/2009	11/25/2009	Engineering
Inspection documentation provided to NDBC	11/23/2009	11/23/2009	OPS/QA
Government Acceptance Inspection	11/24/2009	11/24/2009	OPS/NDBC
Delivery to NDBC	11/25/2009	11/30/2009	Contracts
Begin Production on Package Two (3 systems)	12/1/2009	1/29/2010	Various
Begin Production on Package Three (4 systems)	2/1/2010	3/31/2010	Various
Develop NDBC Procedures for Standard Buoy	8/24/2009	3/1/2010	Engineering
Complete Standard Buoy Drawing Package	8/24/2009	1/29/2010	Engineering

Date Created: 9/15/09

Version 3

Science Applications International Corporation
From Science to Solutions™

April 23, 2009

National Oceanic and Atmospheric Administration
Attention: Mr. Kurt Weilbaecher
Contracting Officer
National Data Buoy Center
John C. Stennis Space Center, MS 39529-6000

Subject: Contract QA1330-05-CQ1035, Performance-Based Contract for Technical Services for the Operation and Maintenance of the Marine Observation Network, Request for Proposal for NDBC Standard Buoys (9 each).

Dear Mr. Weilbaecher:

Science Applications International Corporation (SAIC) respectfully submits this Firm Fixed Price proposal for production of nine (9) NDBC Standard Buoys in response to the subject RFP.

This proposal is based on the following:

1. SAIC has proposed labor costs in accordance with the subject contract Section B.6 Rate Schedule for Contract Year 5.
2. The Task Management Plan and all assumptions therein.
3. The pricing herein covers the period of performance from May 1, 2009 through June 30, 2010. It is anticipated that the Period of Performance will commence approximately on May 1, 2009 at which time SAIC will place the required components on order, but actual production work will not commence until receipt of the components.

The following proprietary legend applies to all pages of this submission:

SAIC's proposal, contained herein, includes information and data which are privileged, confidential, and/or proprietary to SAIC. This information and data is commercially sensitive and/or financial in nature, is not made available for public review, and is submitted to the government on a confidential basis only for evaluation in relation to this proposal and is exempt under the Freedom of Information Act. The information contained herein is protected, among other things, by the Trade Secrets Act, as codified, and any improper use, distribution, or reproduction is specifically prohibited. No license

Building 3205, Stennis Space Center, Mississippi 39529-6000 (228)688-2302 • FAX (228)688-3489

or right of any kind whatsoever is granted to any third party to use the information contained herein unless a written agreement exists between SAIC and the third party which desires access to the information. The information contained herein is submitted to the government for purposes of review and evaluation in connection with SAIC's proposal denoted herein. No other use of the information and data contained herein is permitted without the express written permission of SAIC. Under no condition should the information contained herein be provided in any manner whatsoever to any third party without first receiving the express written permission of SAIC.

This proposal is valid for a period of thirty (30) days from submission. If you have any questions or would like to discuss this proposal submission, please do not hesitate to contact me at (228) 688-3676 or bonnie.barnum@noaa.gov.

Sincerely,

SCIENCE APPLICATIONS INTERNATIONAL CORPORATION

Bonnie Barnum

Bonnie Barnum
Sr. Contracts Representative

Contract No.: QA1330-05-CQ-1035 / Task Order No.: Task Order 34, Observing Systems
Offeror: Science Applications International Corporation - TSC (Co 6)
Proposal No.: TO34 CY04 NOOSS BUOY PRODUCTION
Proposal Title: Task Order 34, Production of Nine NOOSS Standard Buoy
Period of Performance: All Periods (01 May 09 - 30 Jun 10)

[redacted]

SAIC PROPRIETARY
SAIC's proposal, contained herein, includes information and data which are privileged, confidential, and/or proprietary to SAIC. This information and data is commercially sensitive and/or financial in nature, is not made available for public review, and is submitted to the government on a confidential basis only for evaluation in relation to this proposal and is exempt under the Freedom of Information Act. The information contained herein is protected, among other things, by the Trade Secrets Act, as codified, and any improper use, distribution, or reproduction is specifically prohibited. No license or right of any kind whatsoever is granted to any third party to use the information contained herein unless a written agreement exists between SAIC and the third party which desires access to the information. The information contained herein is submitted to the government for purposes of review and evaluation in connection with SAIC's proposal denoted herein. No other use of the information and data contained herein is permitted without the express written permission of SAIC. Under no condition should the information contained herein be provided in any manner whatsoever to any third party without first receiving the express written permission of SAIC.

Contract No.: QA1330-05-CQ-1035 / Task Order No.: Task Order 34, Observing Systems
Offeror: Science Applications International Corporation - TSC (Co 6)
Proposal No.: TO34 CY04 NOOSS BUOY PRODUCTIOIN
Proposal Title: Task Order 34, Production of Nine NOOSS Standard Buoy
Period of Performance: All Periods (01 May 09 - 30 Jun 10)

FFP Standard Buoy Production

Labor Detail

[redacted]

"Use or disclosure of the data contained on this sheet is subject to the restriction on the title page of this proposal or quotation."

Contract No.: QA1330-05-CQ-1035 / Task Order No.: Task Order 34, Observing Systems
Offeror: Science Applications International Corporation - TSC (Co 6)
Proposal No.: TO34 CY04 NOOSS BUOY PRODUCTIOIN
Proposal Title: Task Order 34, Production of Nine NOOSS Standard Buoy
Period of Performance: 01 May 09 - 30 Jun 10

Consumables / Bill of Material (BOM) Detail

[redacted]

Subcontractor Detail

Ref No.:	Subcontractor Name	Item Description	Qty	Unit Measure	Unit Price	Ext. Price
1				ea		-
2						-
3						-
4						-
5						-
6						-
7						-
8						-
9						-
52						-

Subtotal Subcontractors -

"Use or disclosure of the data contained on this sheet is subject to the restriction on the title page of this proposal or quotation."

Science Applications International Corporation From Science to Solutions™	Document Number:	TMP-34
	Version Number:	2 – Change 4
	Issue Date:	23 April 2009

Technical Management Plan

Title:	Observing Systems

THIS IS A CONTROLLED DOCUMENT

Unless issued by the TMP CM Lead with a control number noted in the blank below, any printed copies are considered uncontrolled.

The official repository for SAIC Task Management Plans is iNUN.

CONTROL NUMBER _____

Change Page Notification

In CY04 SAIC will perform a 1.8m Re-Integration with addition of a TACMET II Sensor. SAIC will utilize an existing integrated 1.8m foam buoy that is ready for deployment. A new GFE sensor has been furnished for this effort; it is the AIO compact weather station sensor part number 102780 (formerly TACMET II). SAIC will Re-Blue Tag the 1.8m buoy (end to end system test and burn-in) for this task. This buoy will be deployed at Station 42080 near Sand Key, FL and the upper mooring which uses the jacketed wire rope will be replaced with the new modified high current mooring with new Unitrex XS. SAIC's cost estimate for this tasking is based upon the depth at Station 42080. If NDBC determines that this buoy should be deployed at an alternate deeper location, SAIC will submit a Request for Equitable adjustment for increased costs relative to the mooring line. This buoy will be ready and complete for deployment prior to 15 Feb 2009. This task includes procuring the new mooring line, fabrication of mooring for 42080, verification of the new sensor integrating with WAMDAS payload, re-blue tag. Drawings and test procedures will be updated to reflect any design changes with new sensor or potential mast enhancements. The message format for new sensor will be verified to see if there are any changes to shoreside processing.

Beginning late in Contract Year 04 and continuing through Contract Year 05, SAIC will fabricate, test and deliver nine (9) NDBC "Standard Buoy" systems. This effort is fully detailed in Appendix H.

APPENDIX H

Task Order 34, CLIN ____ NDBC "Standard Buoy" Production

PERIOD OF PERFORMANCE: May 1, 2009 – June 30, 2010

TO TYPE: Firm Fixed Price (FFP)

1.0 Overview

1.1 Scope/Statement of Work

This Task Management Plan (TMP) addresses effort to fabricate, test and deliver the NDBC "Standard Buoy" that can be configured in three ways: (1) as a National Weather Service (NWS) "yellow" fleet data buoy; (2) as a Tropical Ocean Atmosphere (TAO) climate data buoy and (3) as a Deep-Ocean Assessment and Reporting of Tsunamis (DART™) data buoy. This effort will encompass the fabrication of the Standard Buoy system as requested by NDBC. Each complete buoy assembly will consist of one hull with tower and bridle (02.3FB1000-001), one upper well assembly (02.3F01105), two tube enclosure cans and gaskets (NDBC-X002, NDBC-X004). SAIC will construct, test, and deliver a total of nine (9) buoys and buoy components in accordance with all applicable documents and the provisions in section 4.0 of the Statement of Work. No components or assemblies are to be painted. The scope of the Contractor Tasks encompasses the preparation and submission of a Construction Sequence Plan, a quality assurance program, actual fabrication and assembly, inspection and testing as indicated by applicable drawings and specifications, delivery of completed buoys and buoy components and delivery of all required documentation.

1.2 Management Approach

[redacted]

[redacted]

1.3 Mitigation strategies:

[redacted]

1.4 Supporting Documents and References:

The following drawings and specifications will be utilized in the fabrication, testing, inspection and final delivery of the buoy assembly:

Drawing Title	Dwg Number	Rev
2.3M Std Buoy Mechanical System Assembly (WEAH)	02.3FB1000-001	-
Upper Well Assembly	02.3F01105	-
Tube Enclosure Can	NDBC-X002	-
Tube Enclosure Gasket	NDBC-X004	-
Specification Title	**Spec Number**	**Rev**
Spec. for the Const. of Aluminum Ocean Body Structures	OE-5028	F
Welding and Repair Process	NDBC-8031	B
Inspection System Requirements	MIL-I-45208	A
2.3M Structural Load Test Procedure	SAIC-ETP-08-027	-

NDBC-1000 *NDBC Standard Test Procedure for Preparing NDBC Test and Calibration Procedures*

1.5 Assumptions and Deviations:

[redacted]

[redacted]

2.0 Implementation Plan

A Construction Sequence Plan will be developed after award and submitted by July 1, 2009 as a Deliverable under this tasking.

3.0 Points of Contact

[redacted]

4.0 Deliverables/Activities

Deliverables/Submittals	Due Date	Acceptance Criteria
Construction Sequence Plan	07/01/2009	Upon Acceptance by NDBC
Fabrication of one (1) buoy system	08/15/2009	Test Data Sheet and Government Final Inspection
Fabrication of four (4) buoy systems	12/15/2009	Test Data Sheet and Government Final Inspection
Fabrication of four (4) buoy systems	05/15/2010	Test Data Sheet and Government Final Inspection
Progress Report	Monthly	Upon Submission